MIMILI

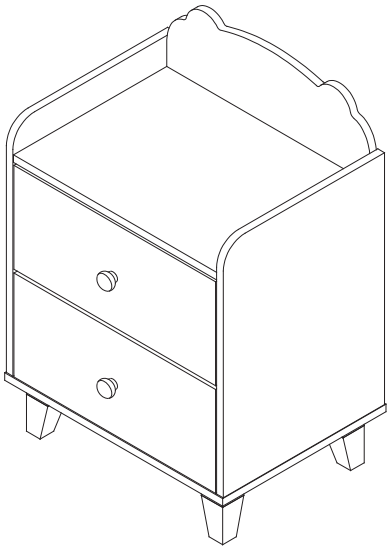

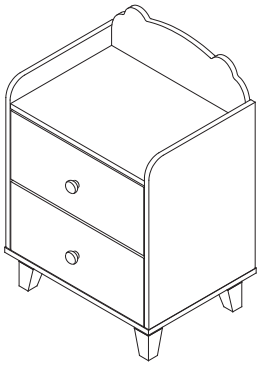

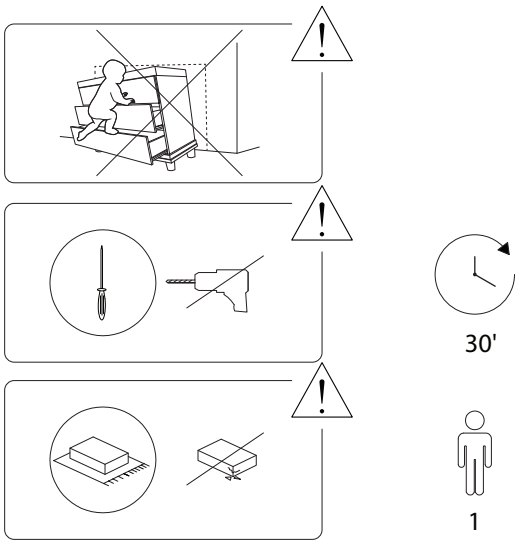

2341/MIMILI/091026

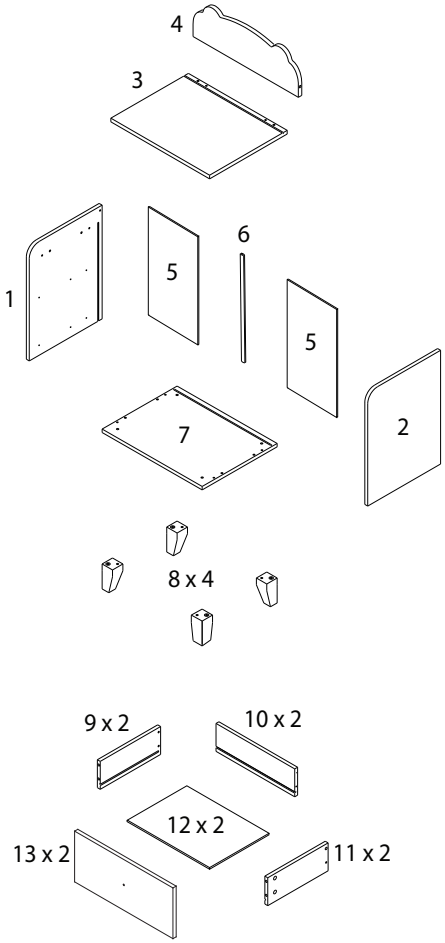

2341/MIMILI/091026

1  x 1	2 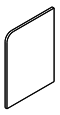 x 1	3 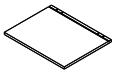 x 1	4 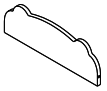 x 1	5  x 2
6  x 1	7 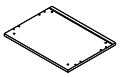 x 1	8  x 4	9  x 2	10  x 2
11  x 2	12 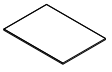 x 2	13 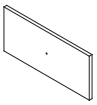 x 2	A  x 15	B  x 15
C  x 14	CL  x 2	CR  x 2	D  x 20	DL 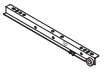 x 2
DR  x 2	G  x 12	H  x 4	I  x 2	J  x 2

2341/MIMILI/091026

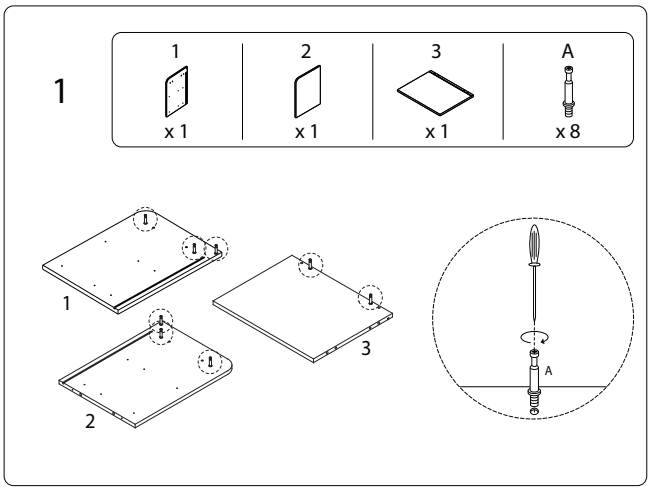
1
1
x 1
2
x 1
3
x 1
A
x 8
1
2
3
A

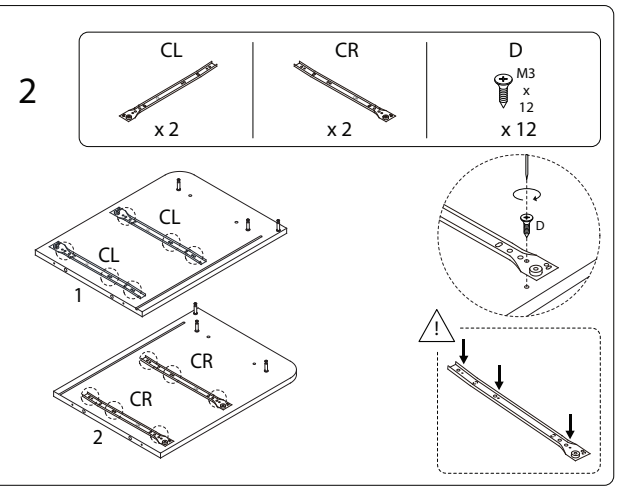
2
CL
x 2
CR
x 2
D
M3
x
12
x 12
CL
CL
1
CR
CR
2
D
!

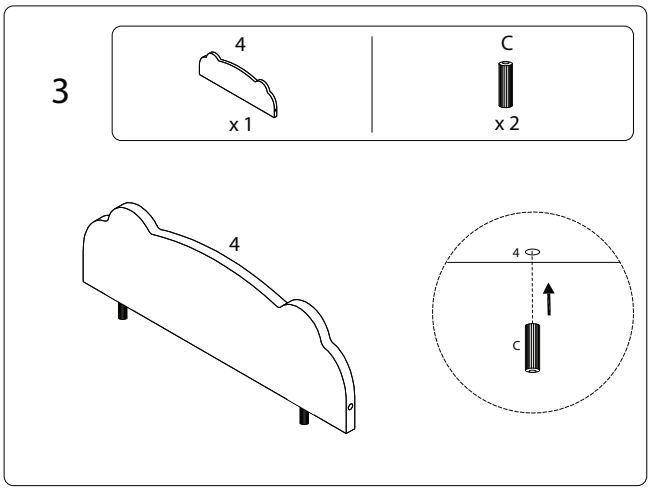
3
4
x 1
C
x 2
4
4
C

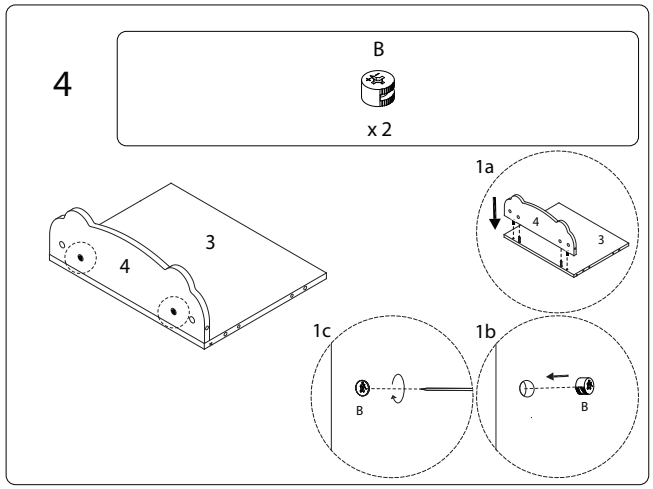
4
B
x 2
1a
4
3
3
4
1c
1b
B
B

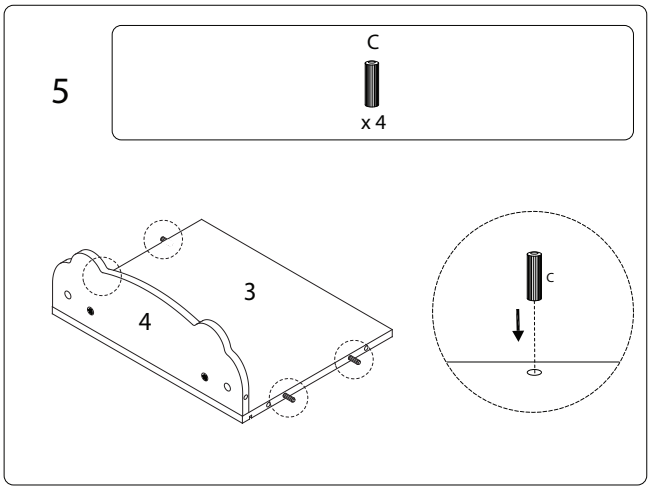
5
C
x 4
3
4
C

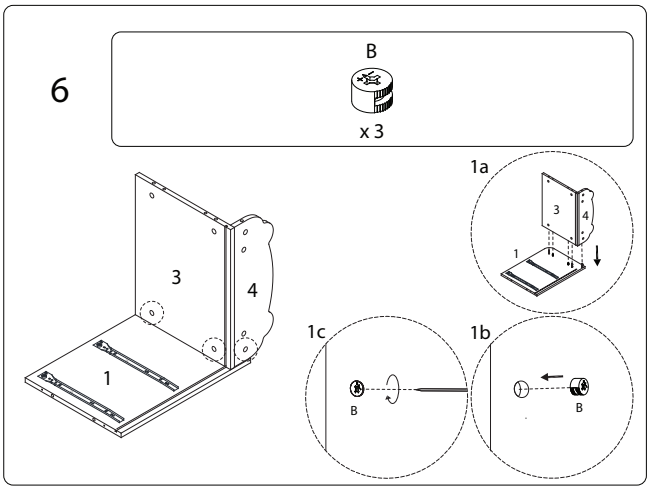
6
B
x 3
1a
3
4
1
3
4
1
1c
1b
B
B

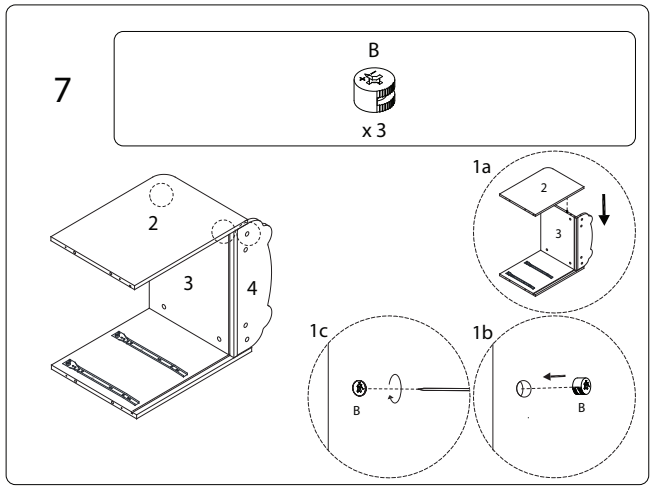
7
B
x 3
1a
2
3
2
3
4
1c
1b
B
B

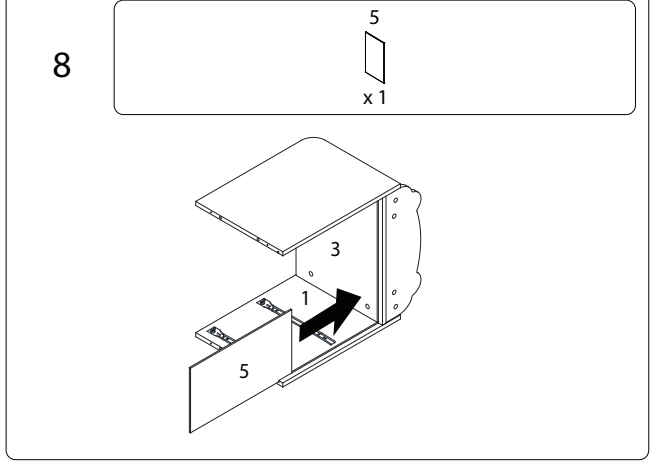
8
5
x 1
3
1
5

9

B

x 3

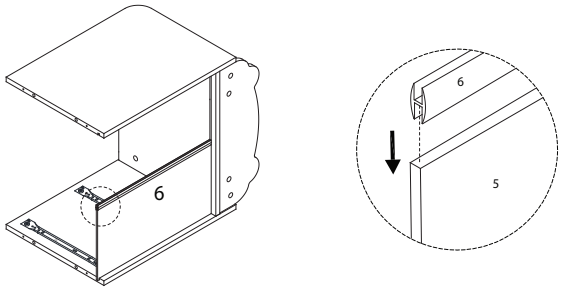

10

5

x 1

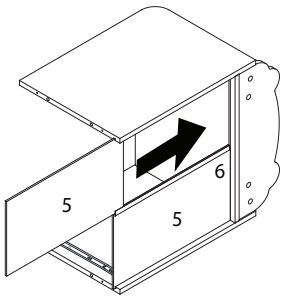

11

7

x 1

C

x 4

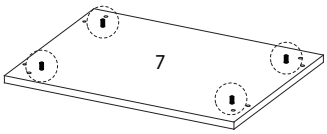

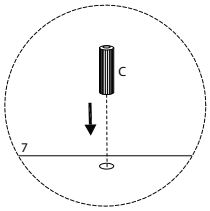

12

8

x 4

H

M6 x 20

x 4

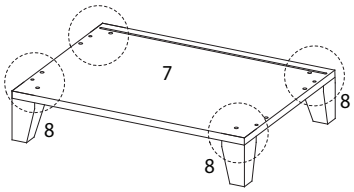

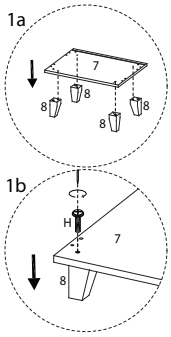

13

C

x 4

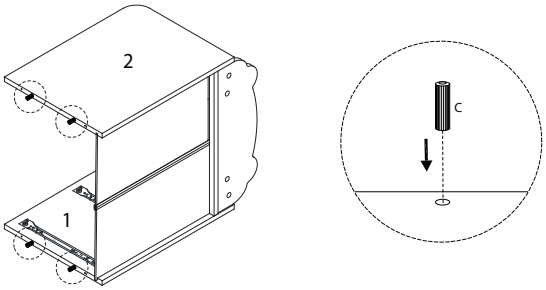

14

G

M4 x 35

x 4

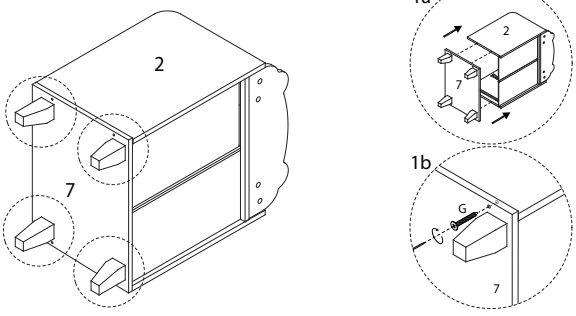

15 x 2

9

x 1

10

x 1

11

x 1

G

M4 x 35

x 4

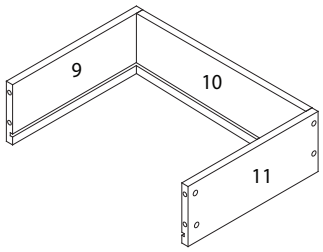

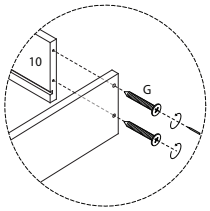

16 x 2

12

x 1

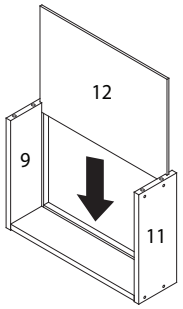

17 x 2

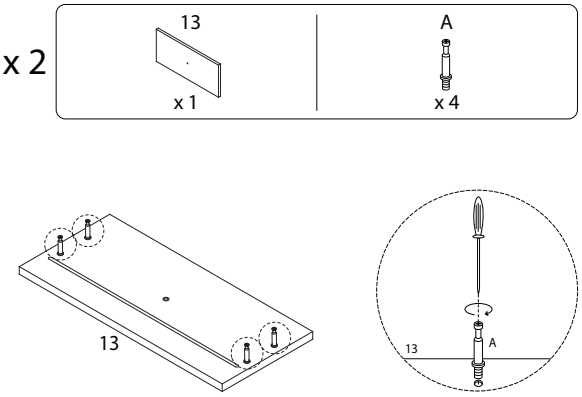

19 x 2

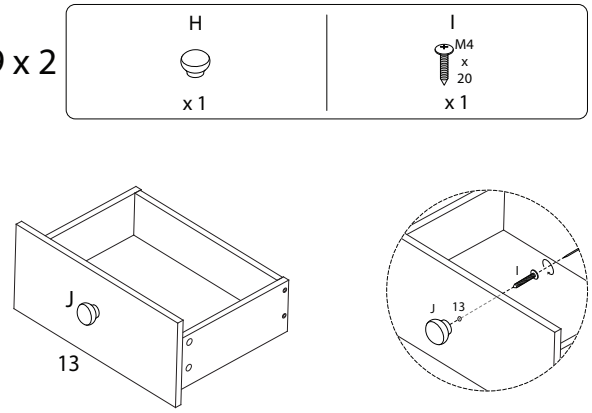

18 x 2

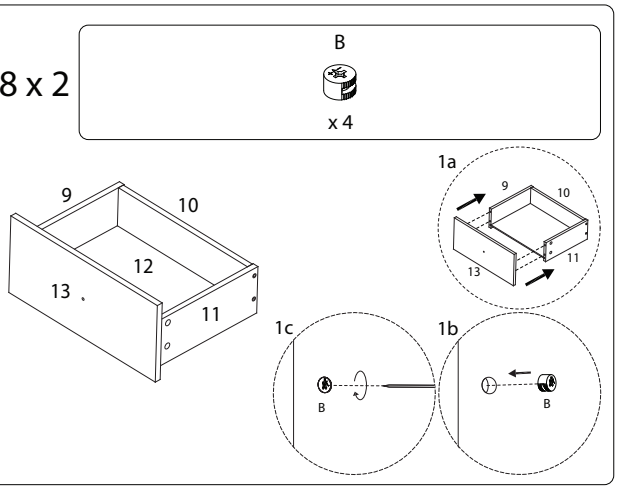

20 x 2

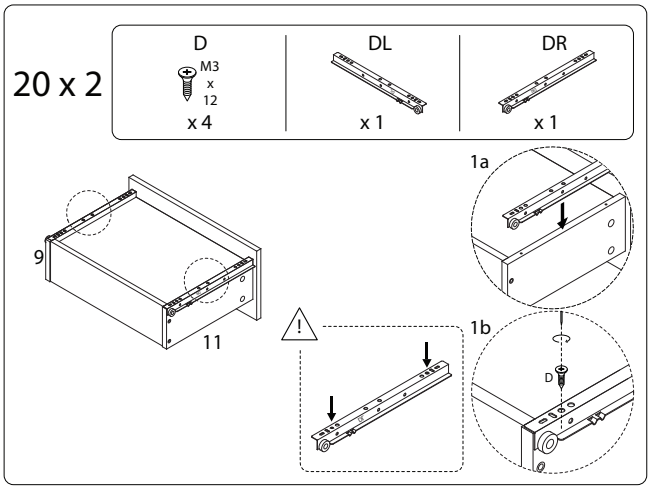

2341/MIMILI/091026

2341/MIMILI/091026

21

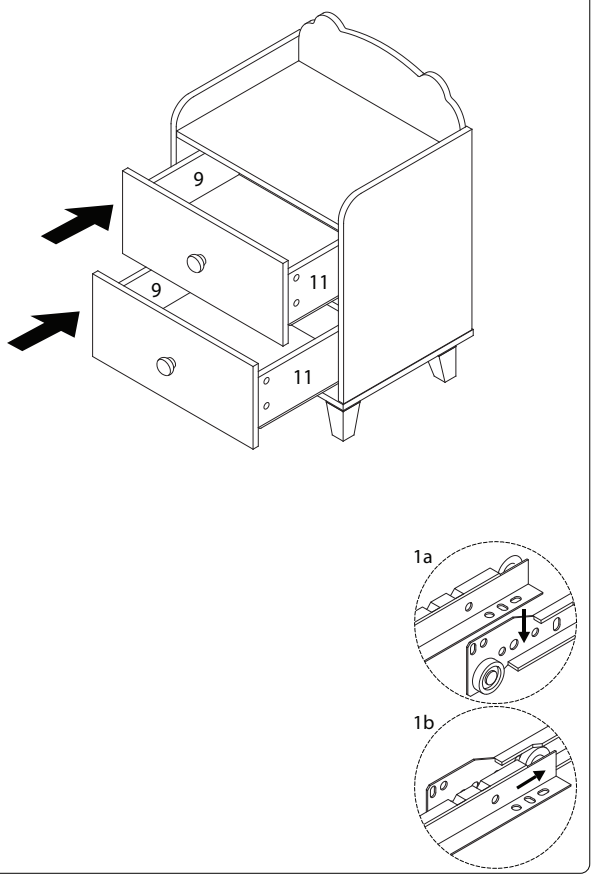

2341/MIMILI/091026