ASKIM

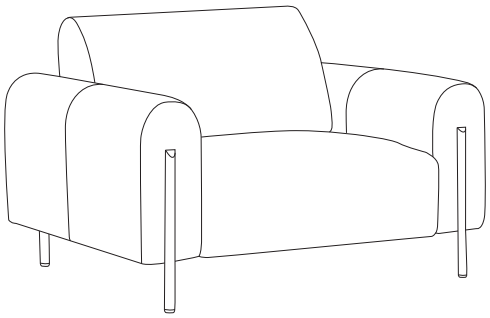

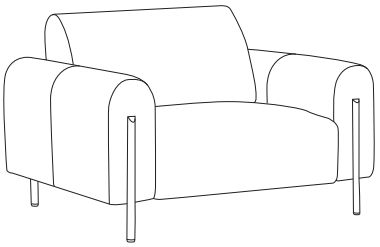

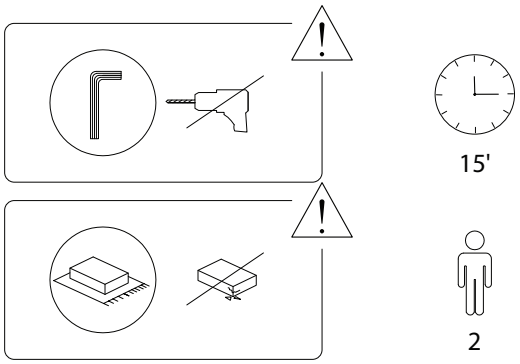

1/4

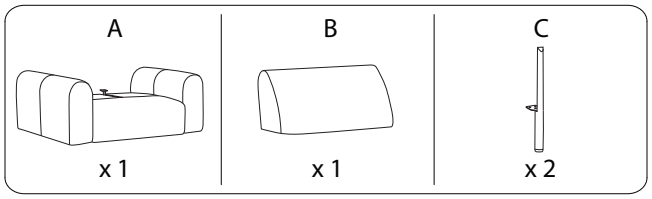

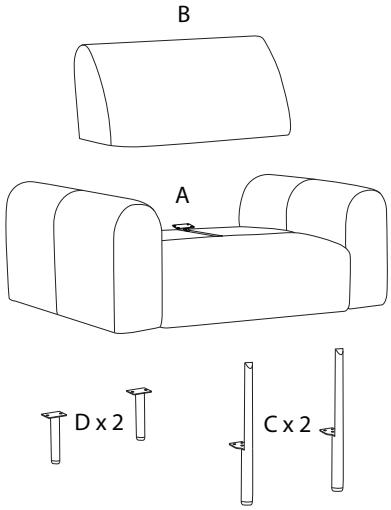

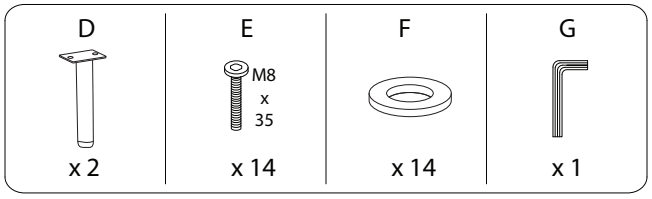

2/4

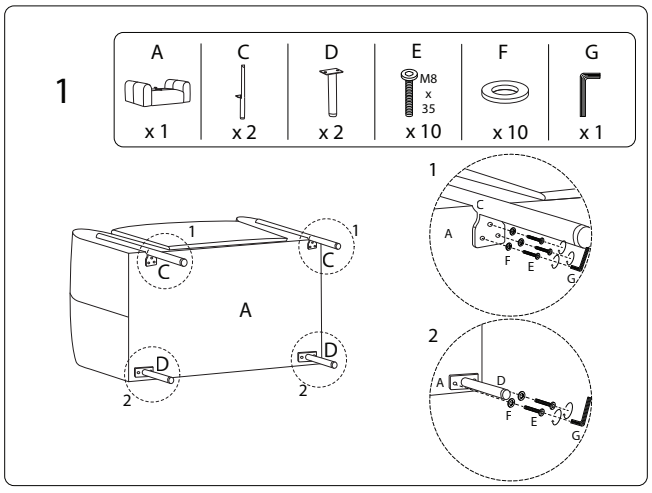

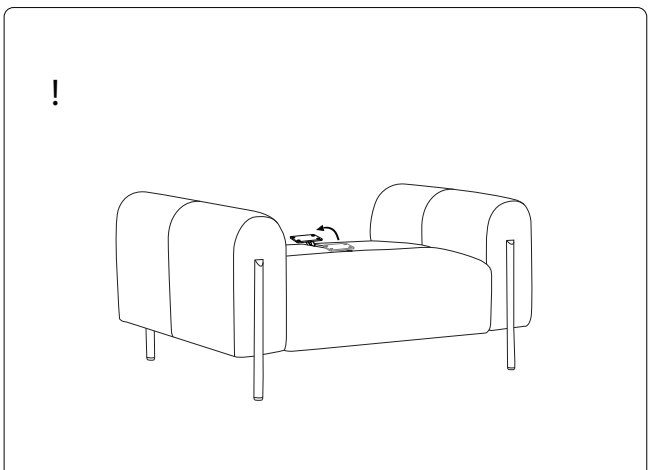

3/4

2

B	E	F	G
	 M8 x 35		
x 1	x 4	x 4	x 1

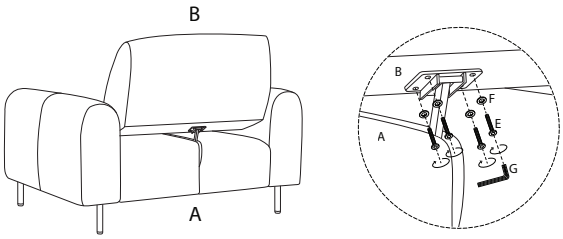

!

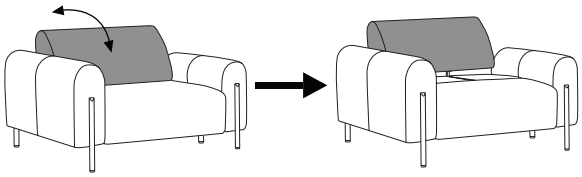

600/ASKIM/220524/