DETROIT

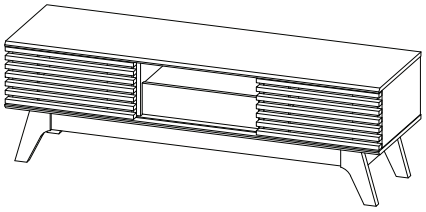

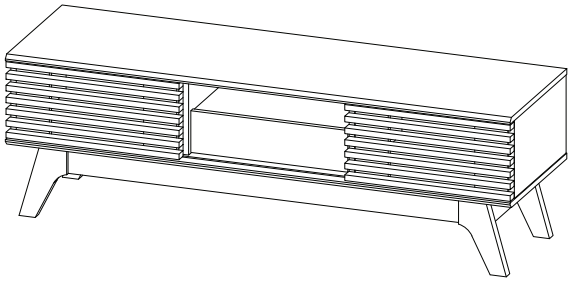

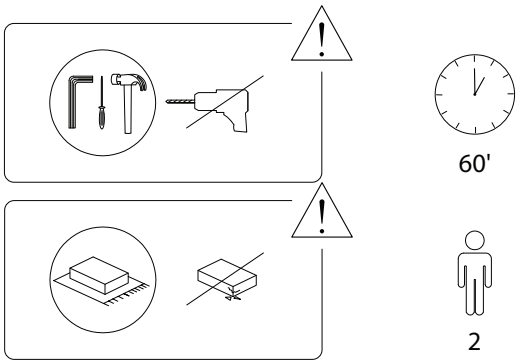
60'
2

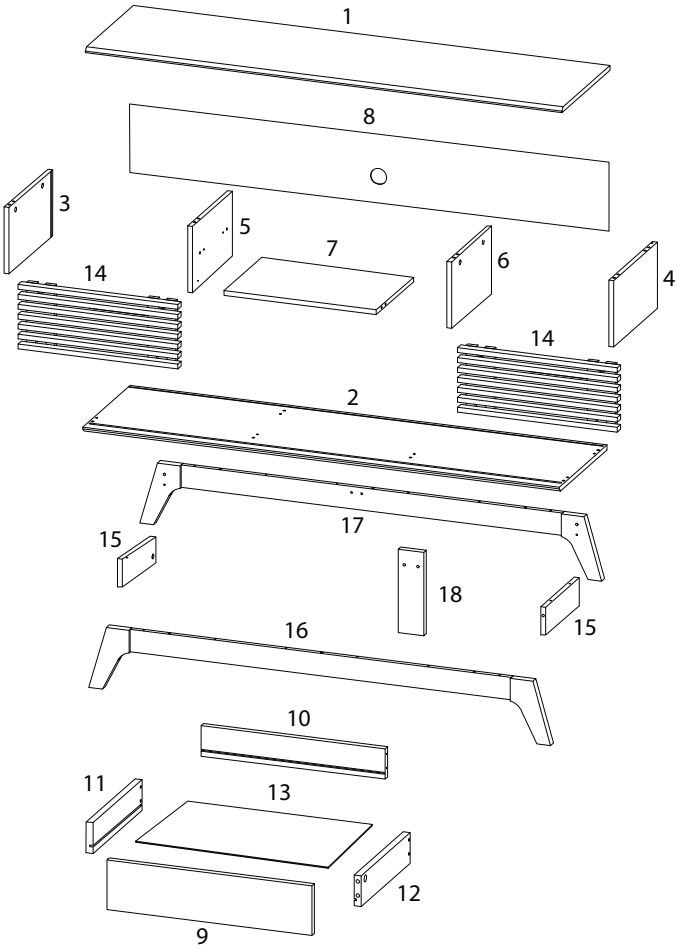
1
8
3
5
7
6
4
14
14
2
17
15
18
15
16
10
11
13
12
9

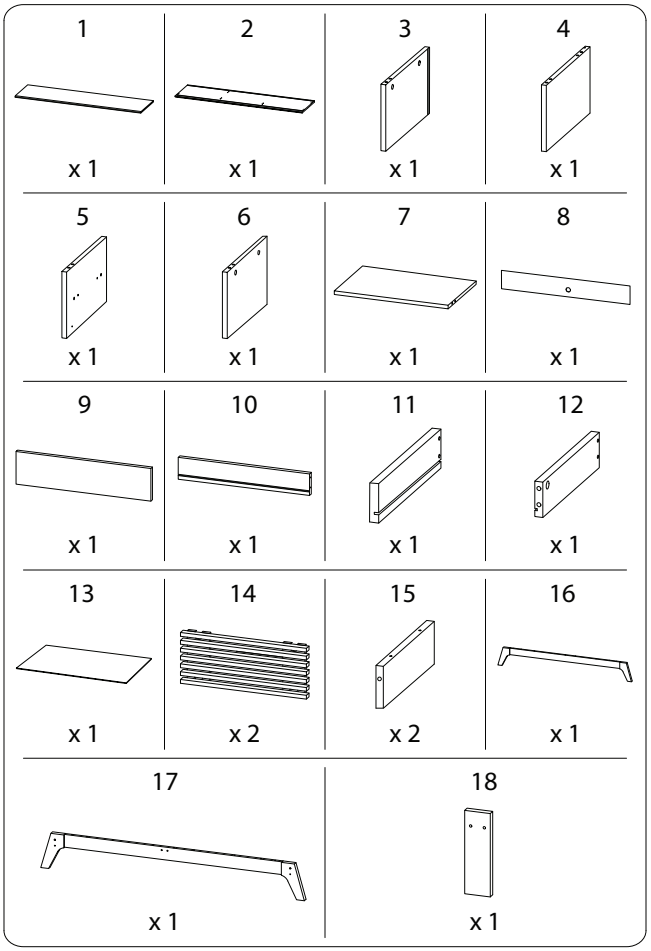
1
x 1
2
x 1
3
x 1
4
x 1
5
x 1
6
x 1
7
x 1
8
x 1
9
x 1
10
x 1
11
x 1
12
x 1
13
x 1
14
x 2
15
x 2
16
x 1
17
x 1
18
x 1

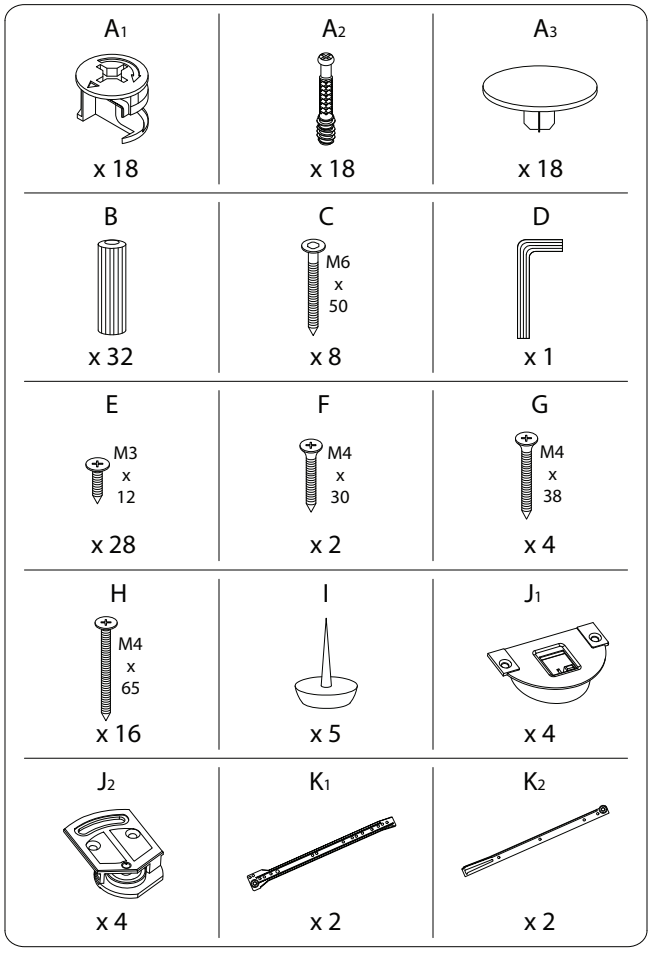
A1
x 18
A2
x 18
A3
x 18
B
x 32
C
M6
x
50
x 8
D
x 1
E
M3
x
12
x 28
F
M4
x
30
x 2
G
M4
x
38
x 4
H
M4
x
65
x 16
I
x 5
J1
x 4
J2
x 4
K1
x 2
K2
x 2

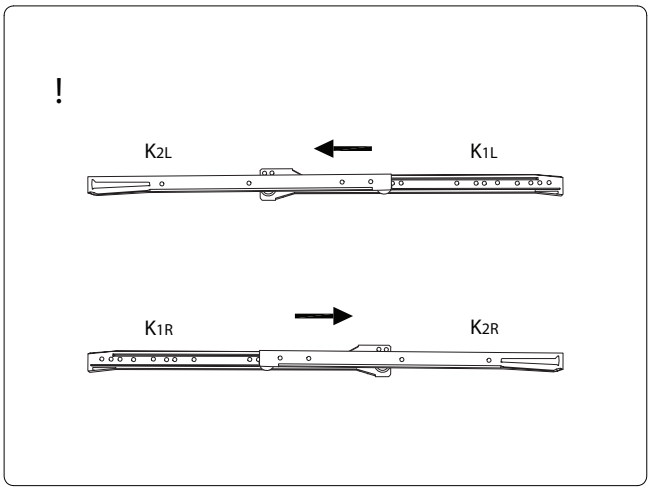
!
K2L
K1L
K1R
K2R

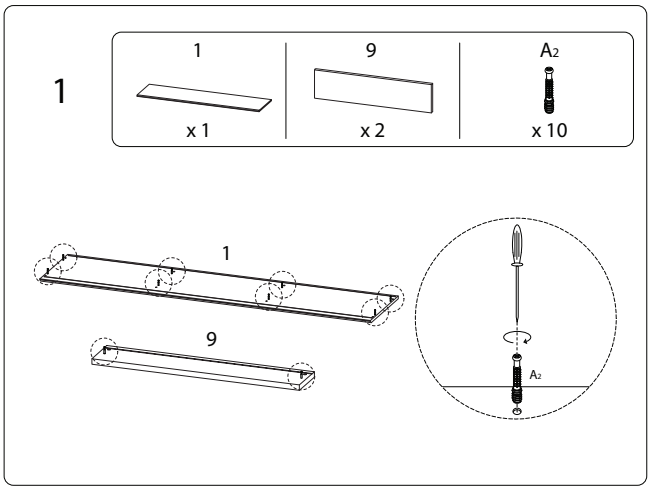
1
1
x 1
9
x 2
A2
x 10
1
9
A2

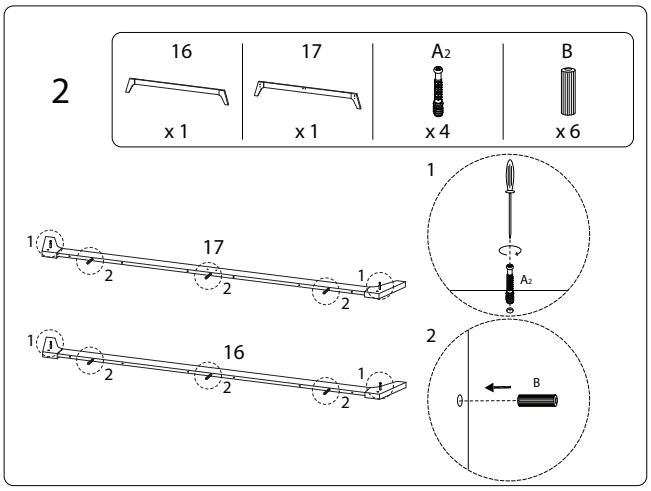
2
16
x 1
17
x 1
A2
x 4
B
x 6
1
17
2
2
1
2
1
16
2
2
1
2
1
A2
2
B

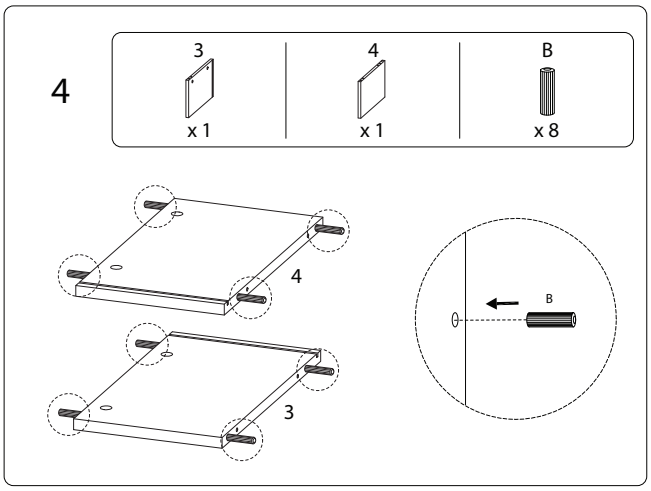
4
3
x 1
4
x 1
B
x 8
4
3
B

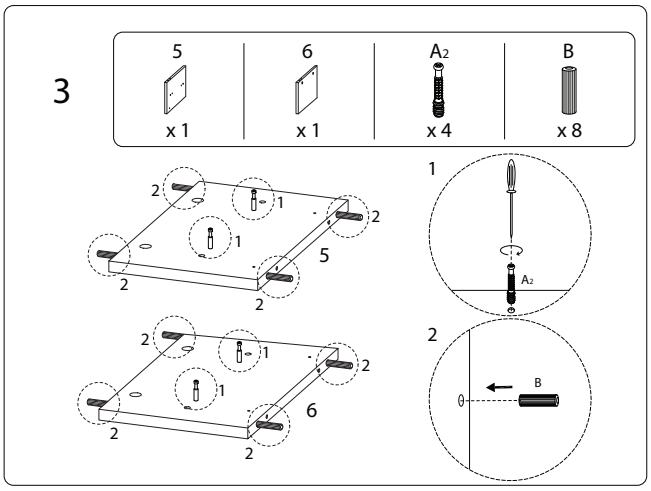
3
5
x 1
6
x 1
A2
x 4
B
x 8
2
1
2
1
5
2
2
2
1
2
1
6
2
2
1
A2
2
B

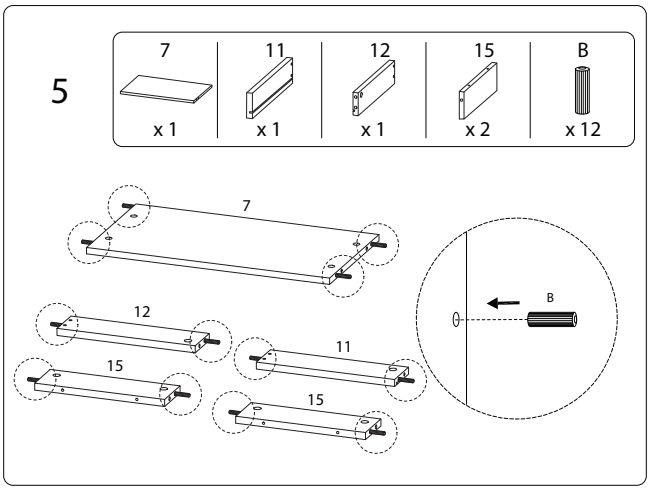
5
7
x 1
11
x 1
12
x 1
15
x 2
B
x 12
7
12
11
15
15
B

6

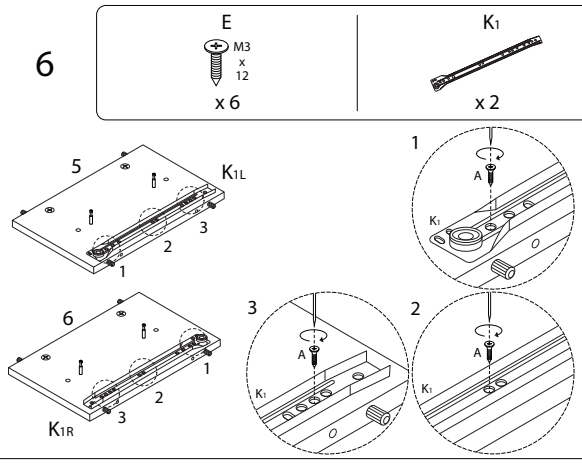

7

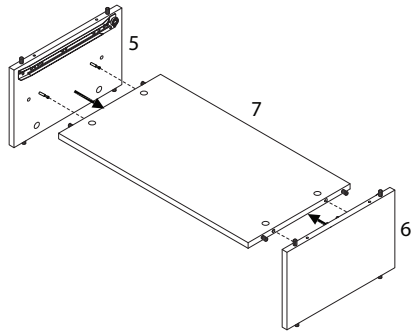

8

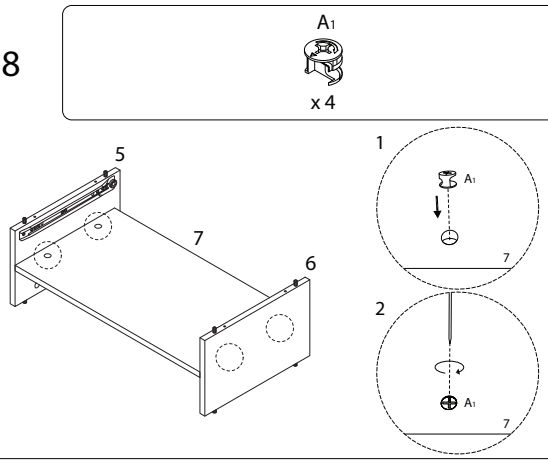

9

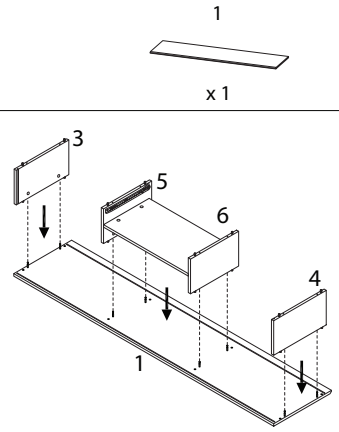

10

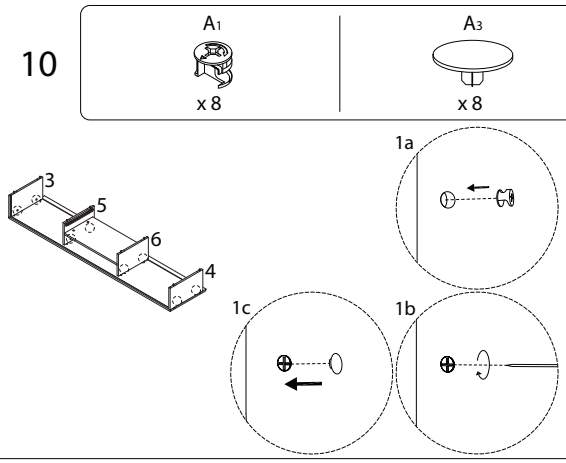

11

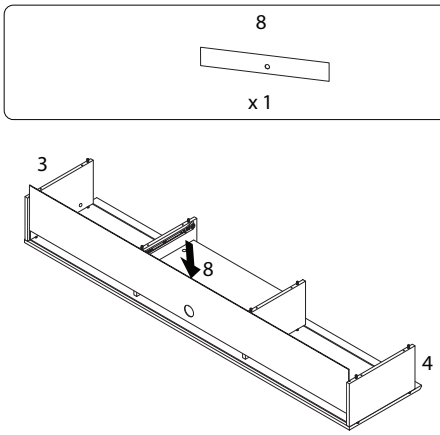

12

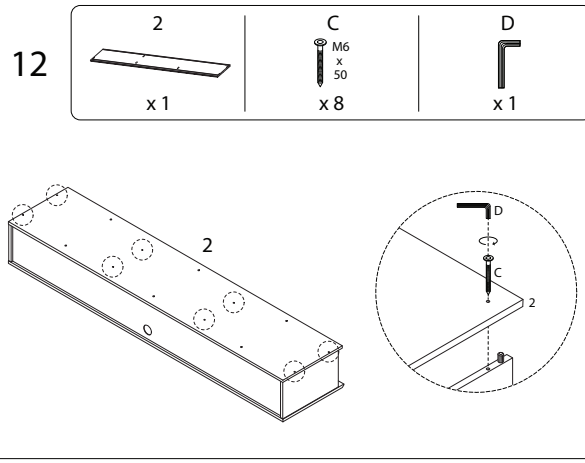

13

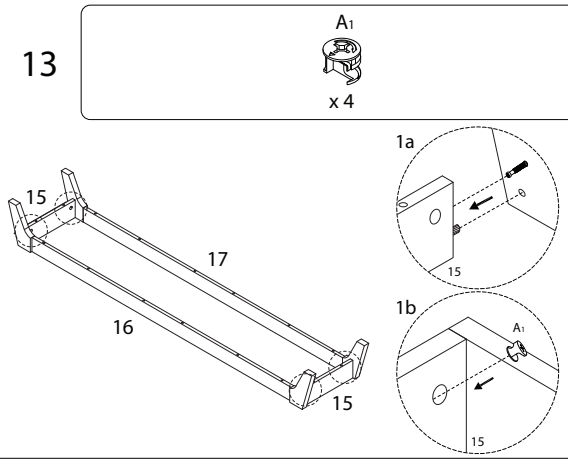

14

A3

x 4

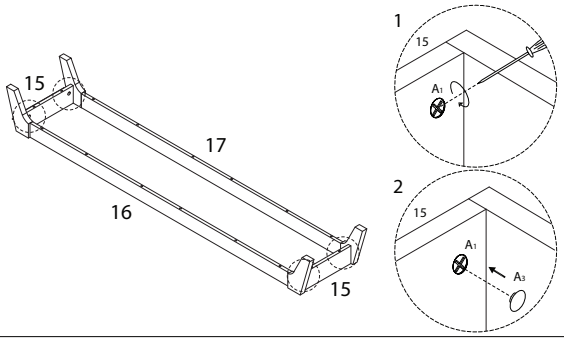

15

H

M4 x 65

x 16

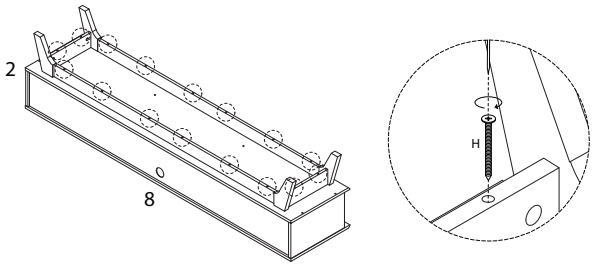

16

18	F	I
x 1	M4 x 30 x 2	x 5

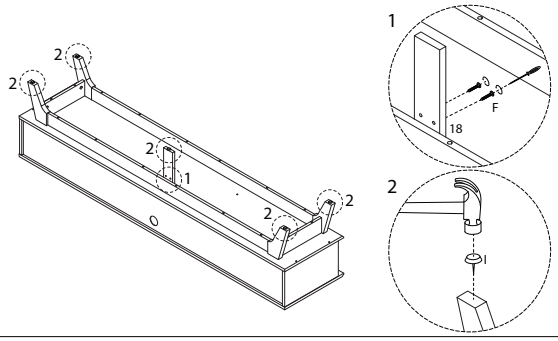

17

10	G
x 1	M4 x 38 x 4

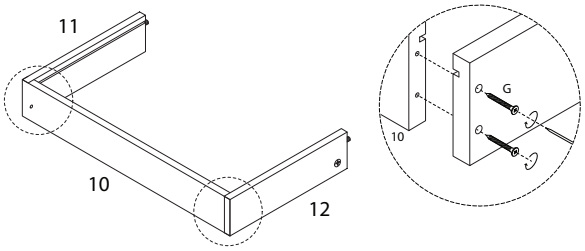

18

13

x 1

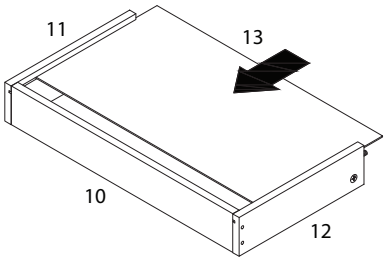

19

A1

x 2

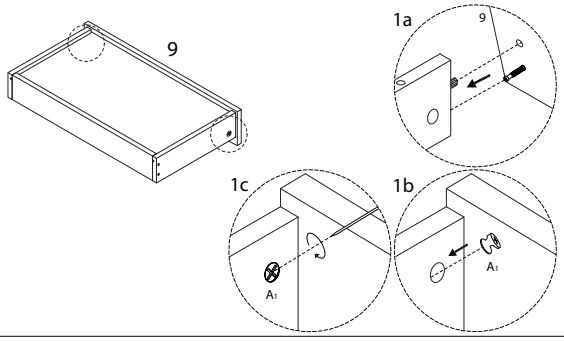

20

E	K2
M3 x 12 x 6	x 2

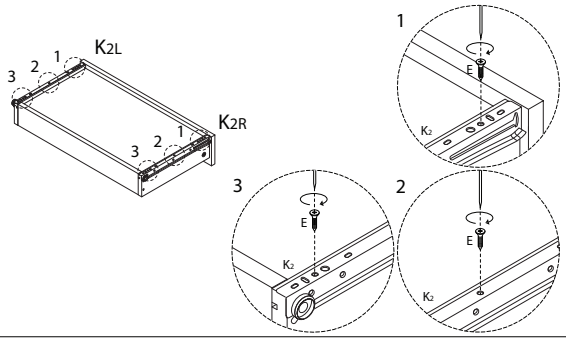

21

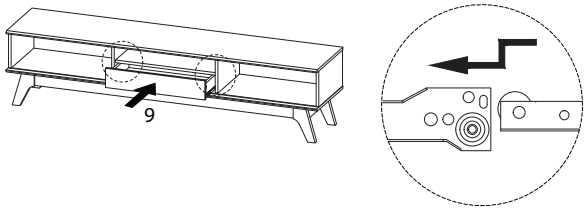

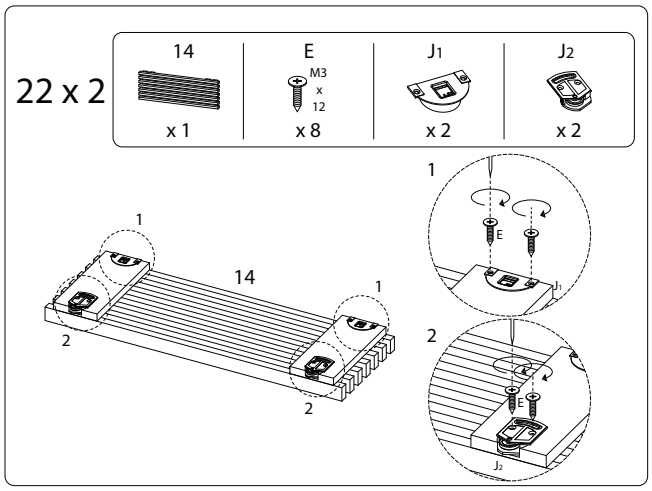

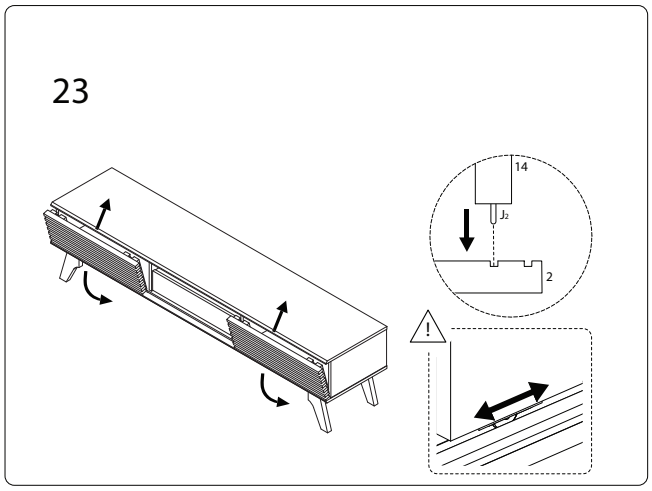

920/DETROIT/230524/