NIKEA

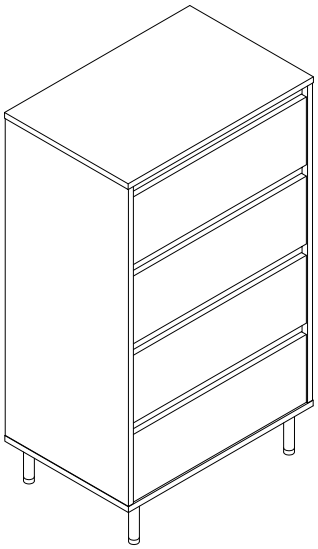

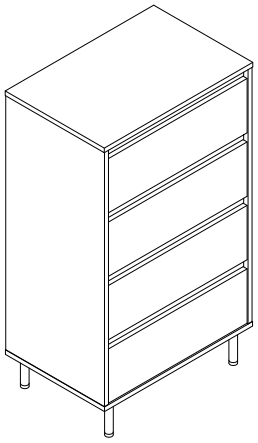

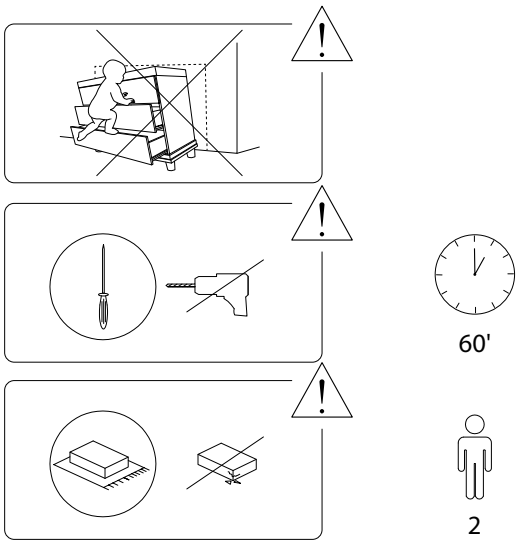
60'
2

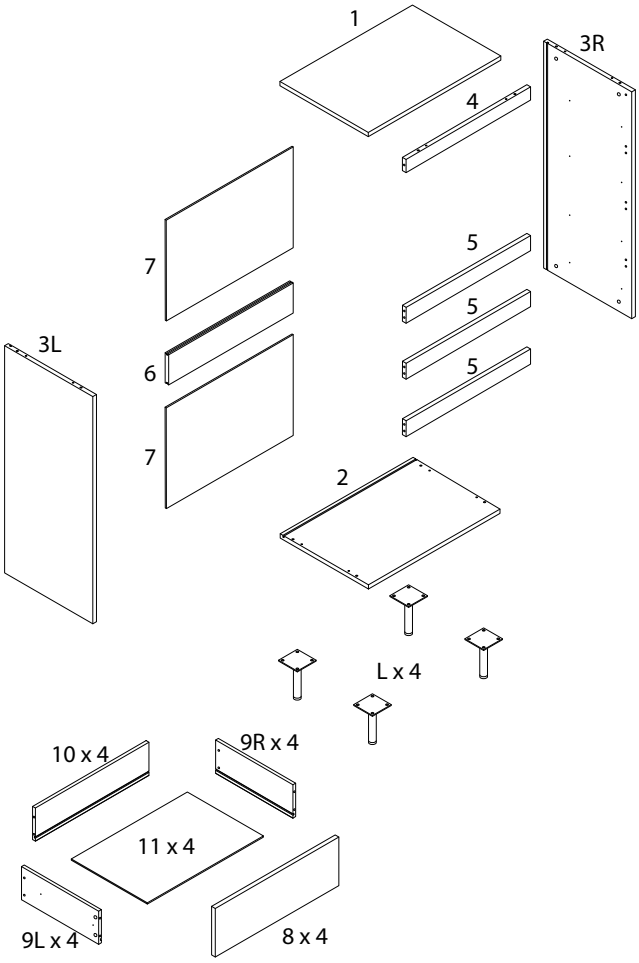
1
3R
4
7
5
5
3L
6
5
7
2
L x 4
10 x 4
9R x 4
11 x 4
9L x 4
8 x 4

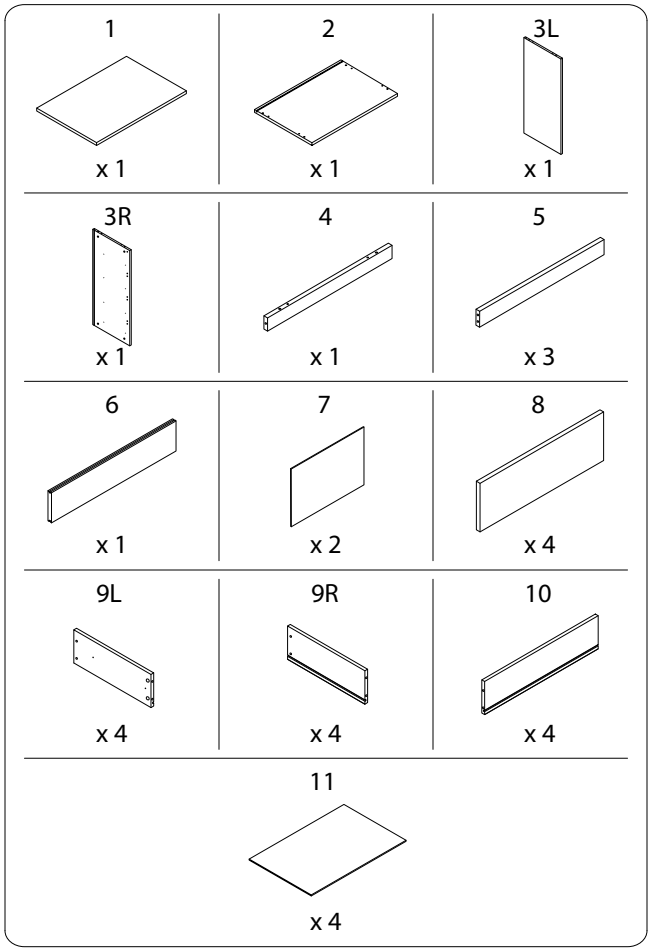
1
x 1
2
x 1
3L
x 1
3R
x 1
4
x 1
5
x 3
6
x 1
7
x 2
8
x 4
9L
x 4
9R
x 4
10
x 4
11
x 4

A x 20	B Ø15 x 20	C x 18
D_1 x 16	D_2 Ø12 x 16	E M4 x 14 x 48
F M4 x 30 x 16	I M6 x 12 x 16	K x 8
L x 4	P_1 x 4	P_2 x 4
P_3 M4 x 38 x 4	P_4 M3 x 12 x 4	P_5 x 2

1 x 8

K x 1

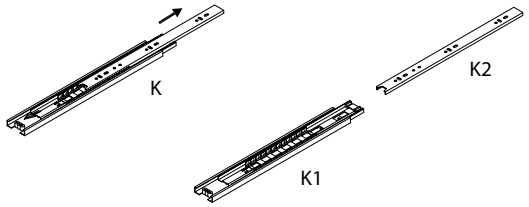

2

2 x 1	I M6 x 12 x 16	L x 4

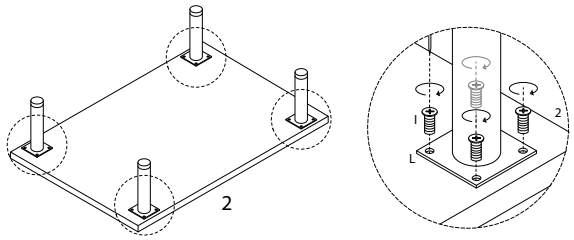

3

A x 4

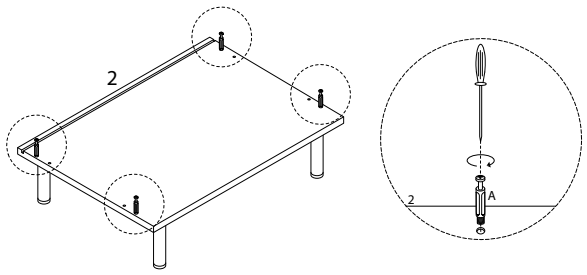

4

C x 4

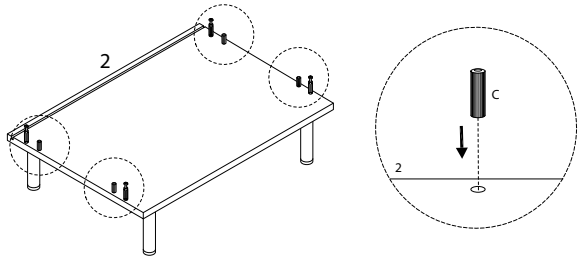

5

3L x 1	3R x 1	E M4 x 14 x 24	K1 x 8

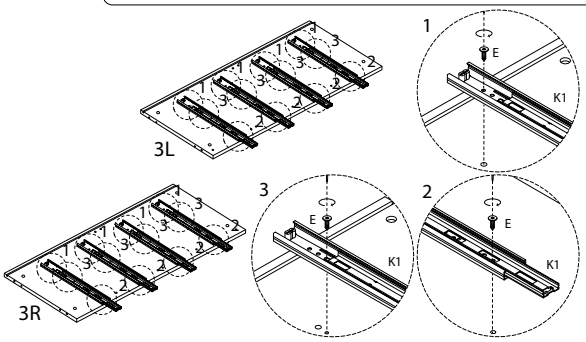

6

C x 8

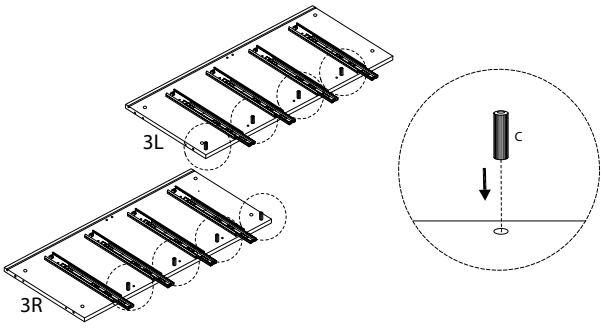

7

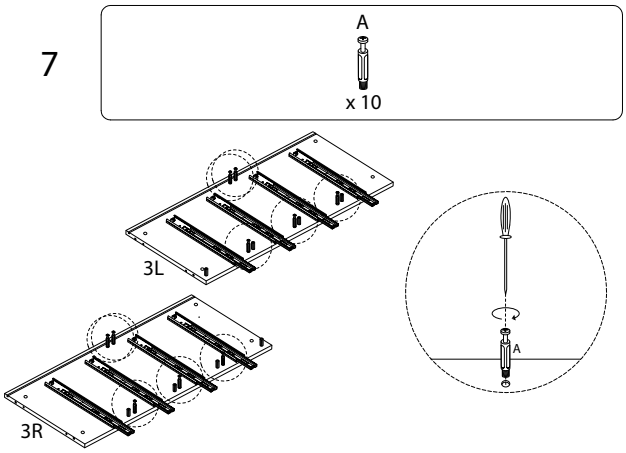

8

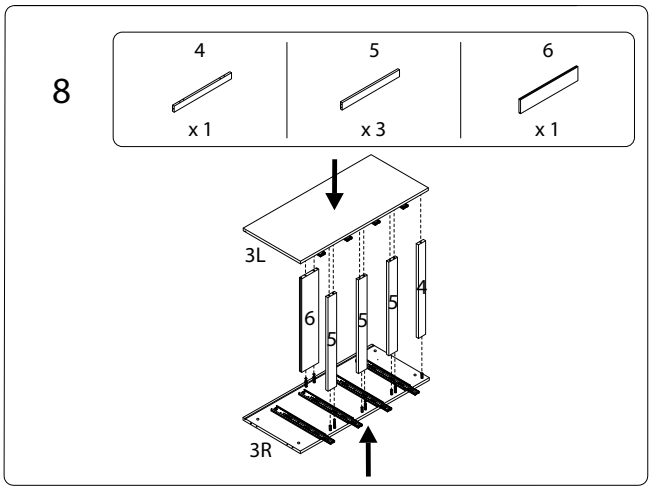

9

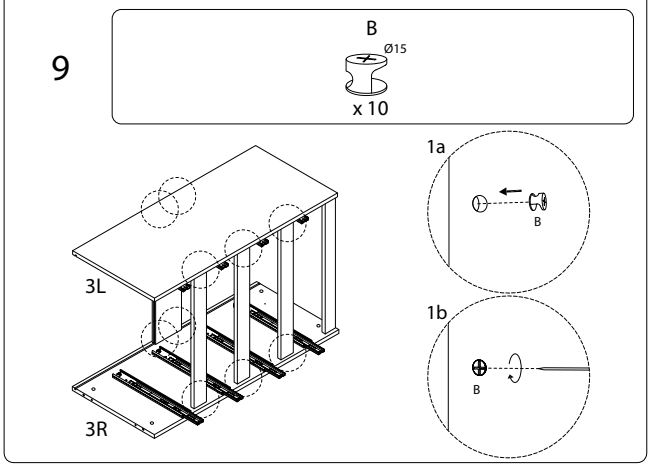

10

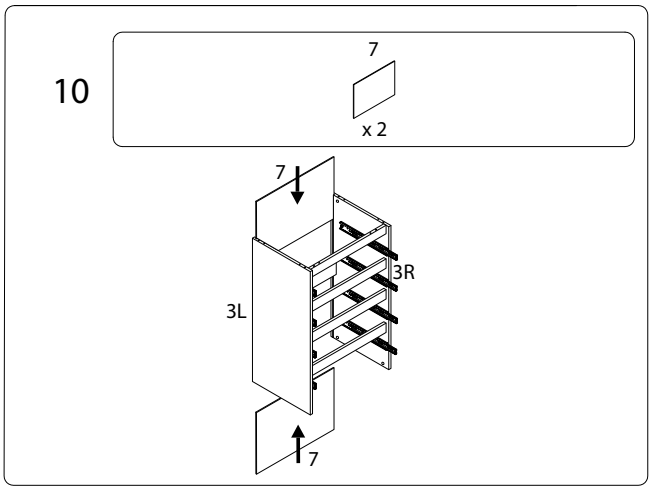

11

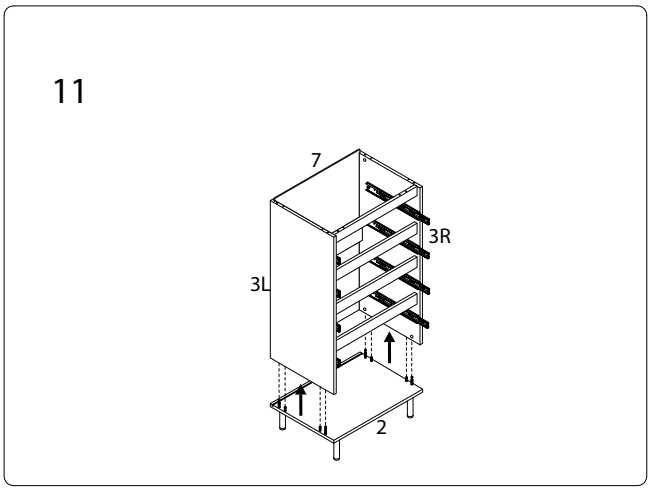

12

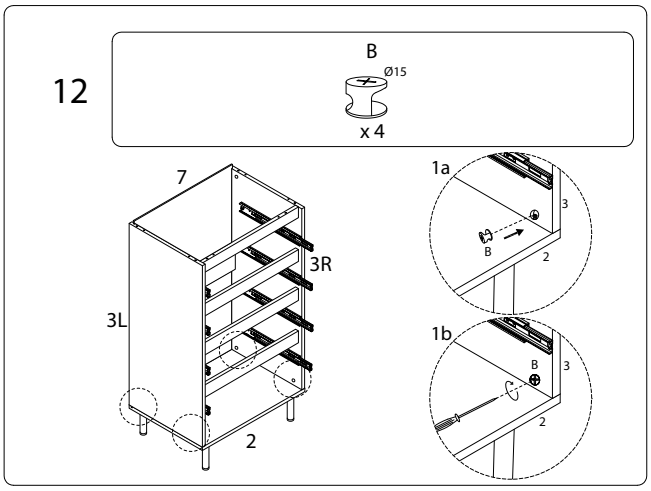

13

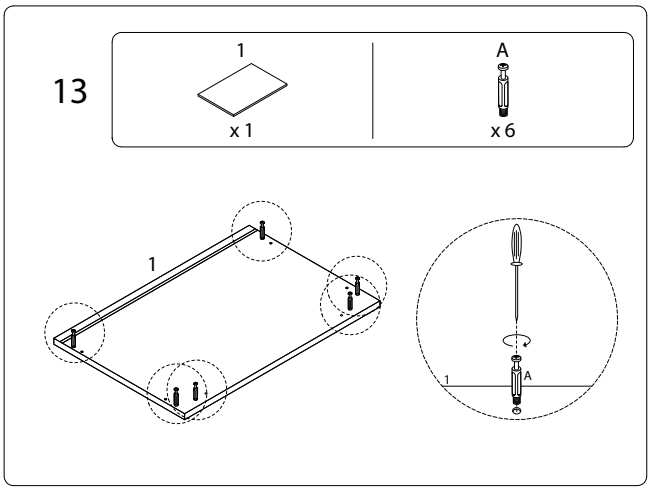

14

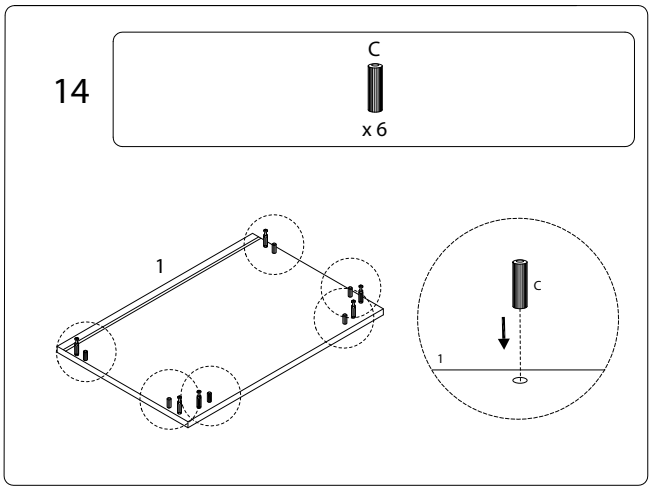

15

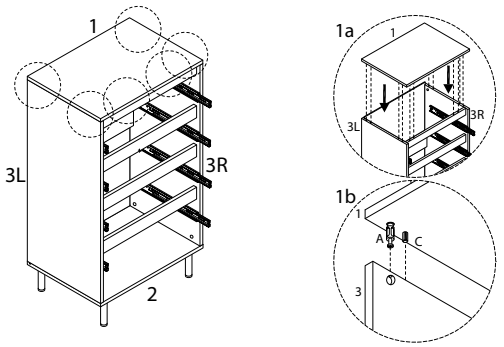

17 x 4

9L	9R	10	F
x 1	x 1	x 1	M4 x 30 x 4

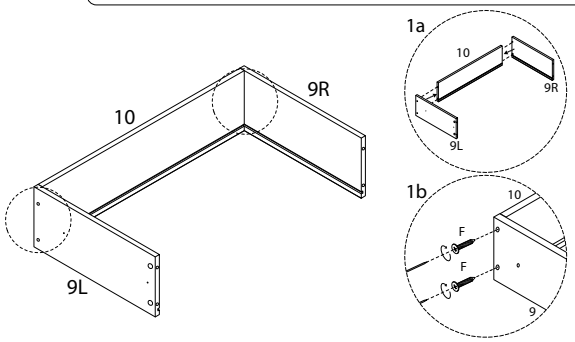

16

B Ø15 x 6

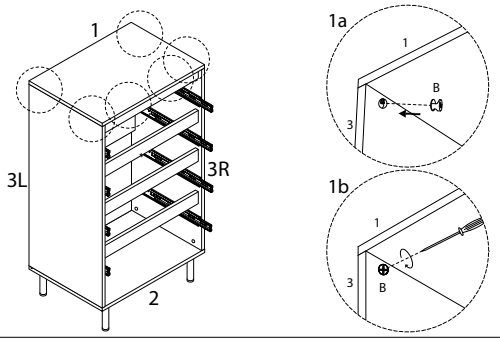

18 x 4

11 x 1

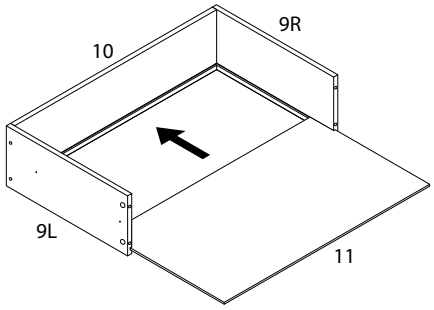

19 x 4

8	D_1
x 1	x 4

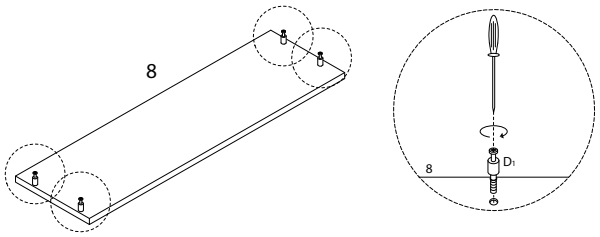

21 x 4

D_2 Ø12 x 4

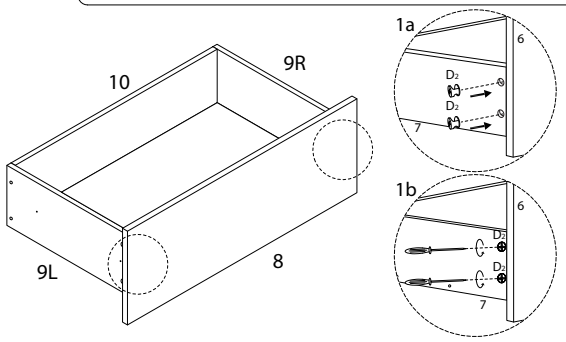

20 x 4

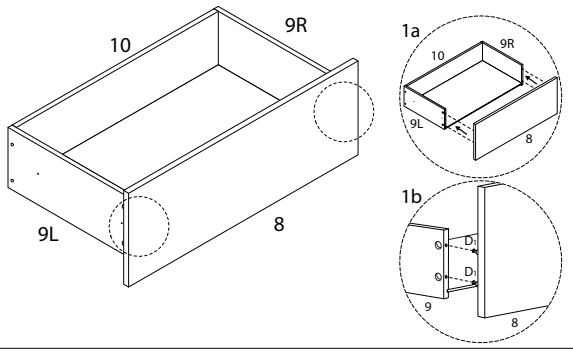

22 x 4

K_2	E
x 2	M4 x 14 x 6

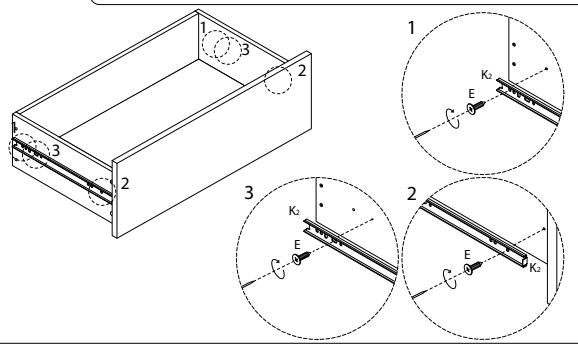

23

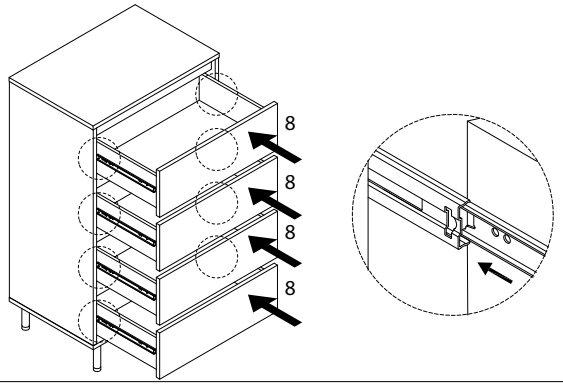

24

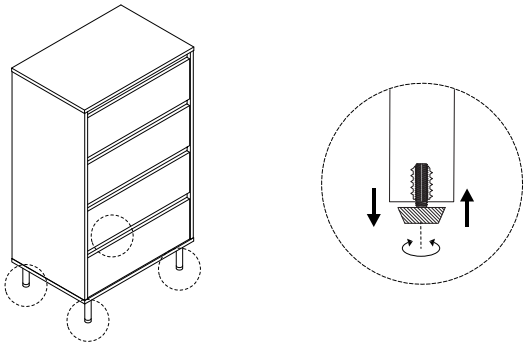

1321/NIKEA/280324/

25

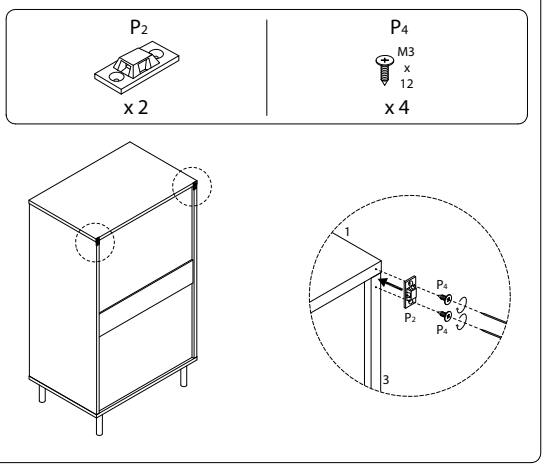

26

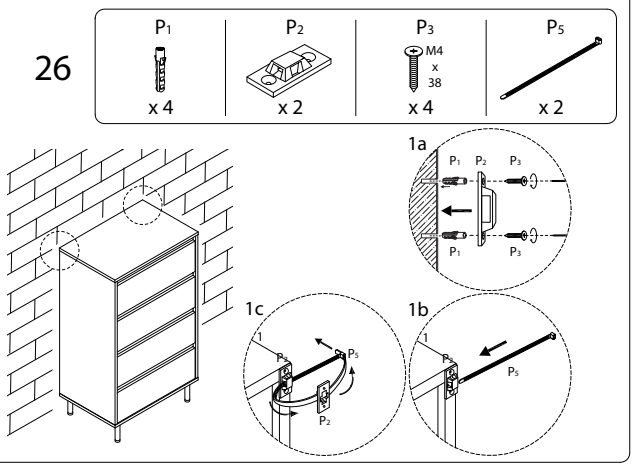

1321/NIKEA/280324/