MARFLA

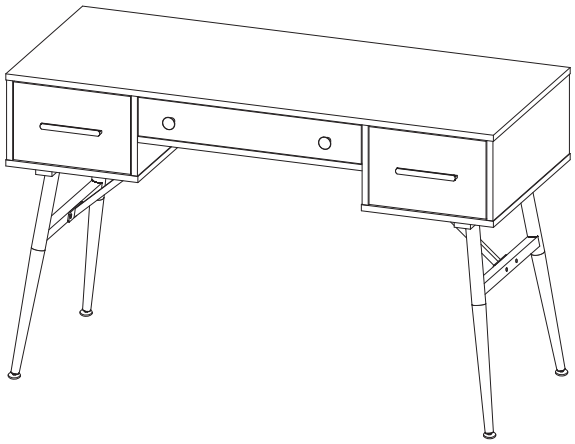

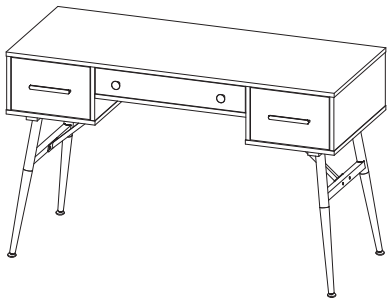

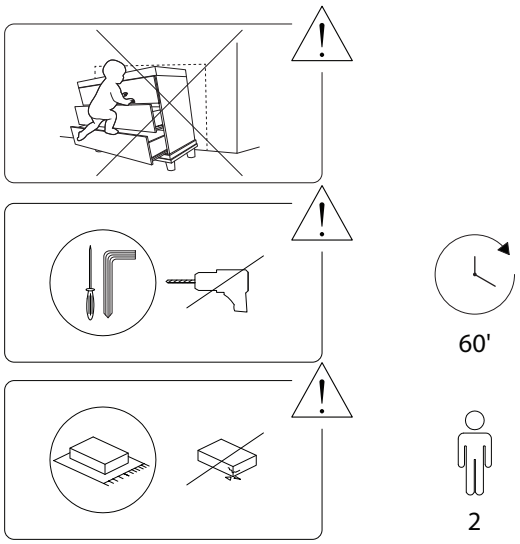

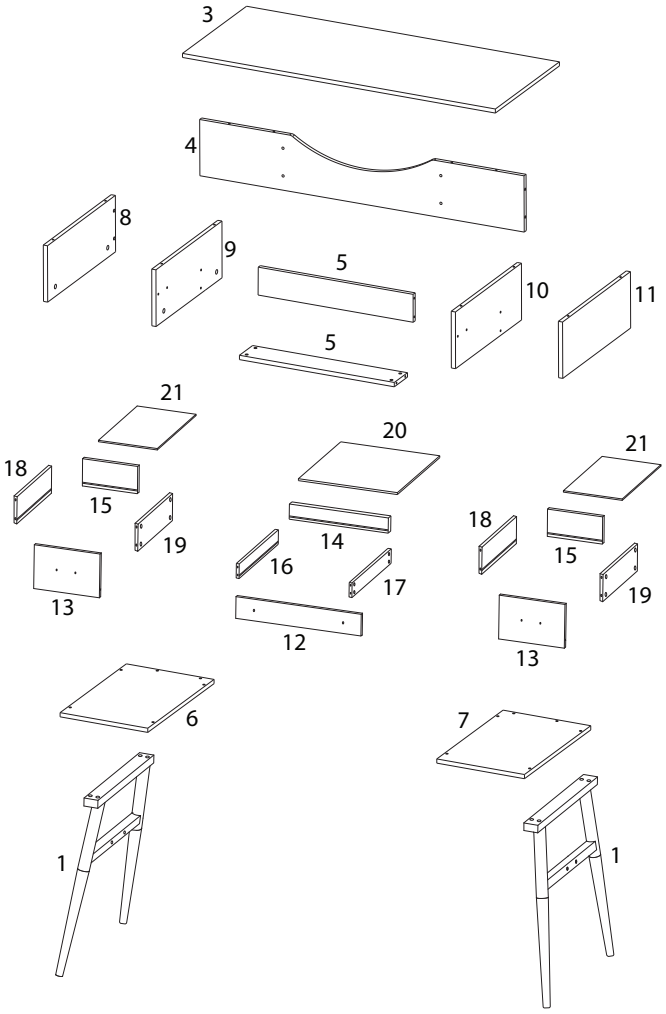

1 x 2	2 x 2	3 x 1	4 x 1
5 x 2	6 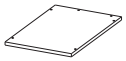 x 1	7 x 1	8 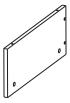 x 1
9 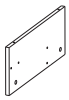 x 1	10 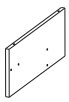 x 1	11 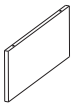 x 1	12 x 1
13 x 2	14 x 1	15 x 2	16 x 1
17 x 1	18 x 2	19 x 2	20 x 1	21 x 2

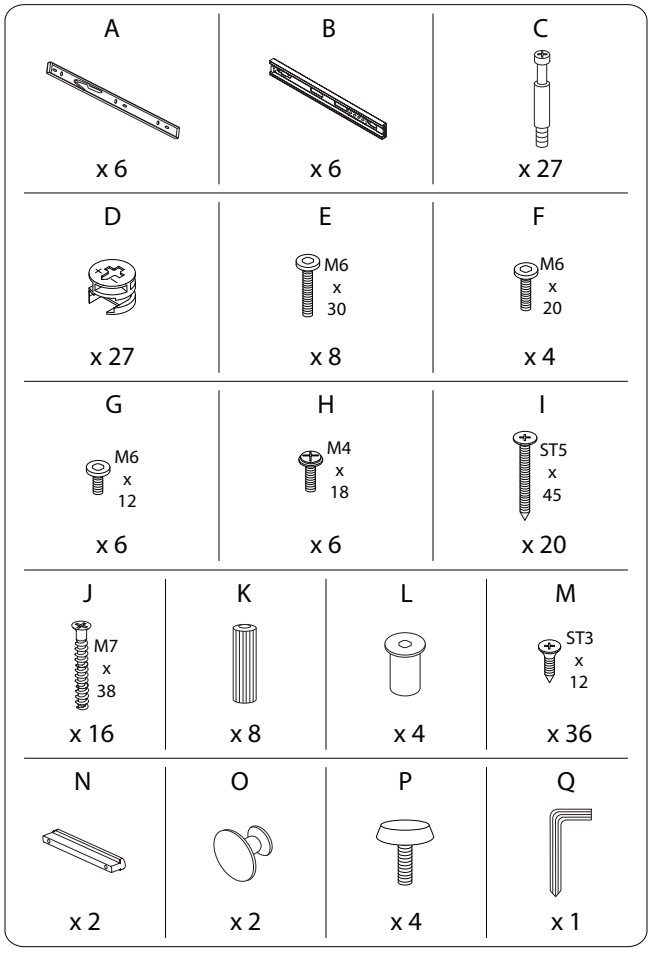
A
x 6
B
x 6
C
x 27
D
x 27
E
M6 x 30
x 8
F
M6 x 20
x 4
G
M6 x 12
x 6
H
M4 x 18
x 6
I
ST5 x 45
x 20
J
M7 x 38
x 16
K
x 8
L
x 4
M
ST3 x 12
x 36
N
x 2
O
x 2
P
x 4
Q
x 1

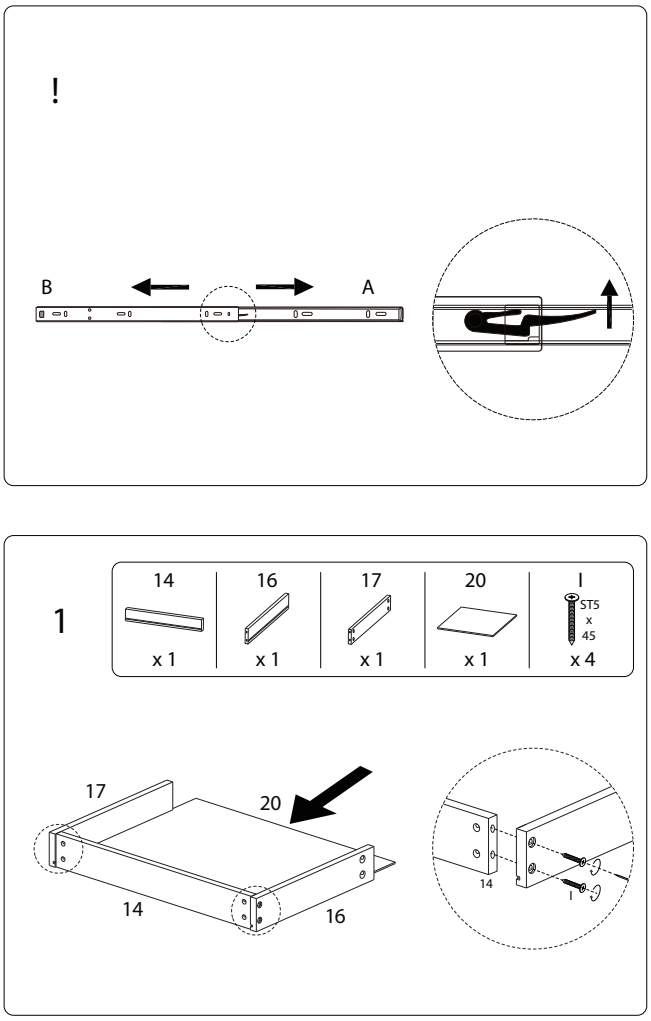
!
B
A
1
14
x 1
16
x 1
17
x 1
20
x 1
I
ST5 x 45
x 4
17
20
14
16
14
I

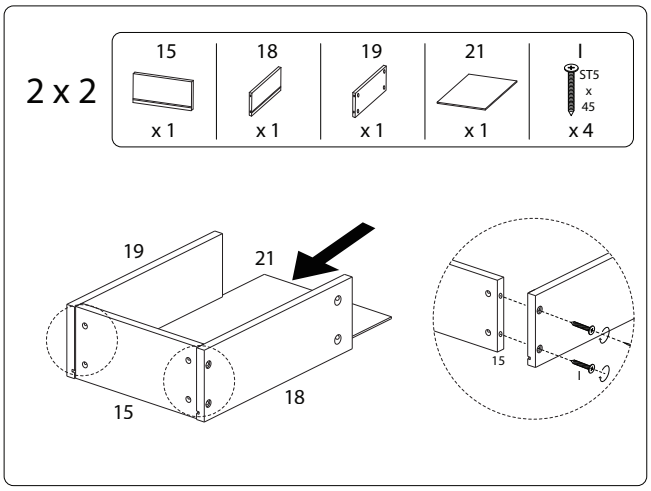
2 x 2
15
x 1
18
x 1
19
x 1
21
x 1
I
ST5 x 45
x 4
19
21
15
18
15
I

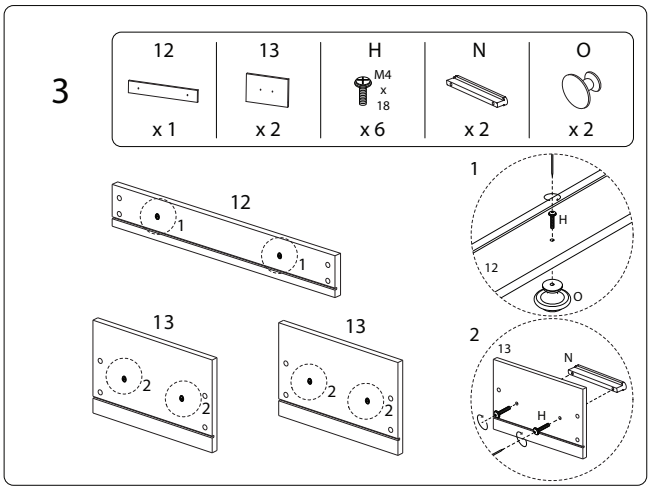
3
12
x 1
13
x 2
H
M4 x 18
x 6
N
x 2
O
x 2
12
1
1
13
2
2
13
2
2
1
H
12
O
2
13
N
H

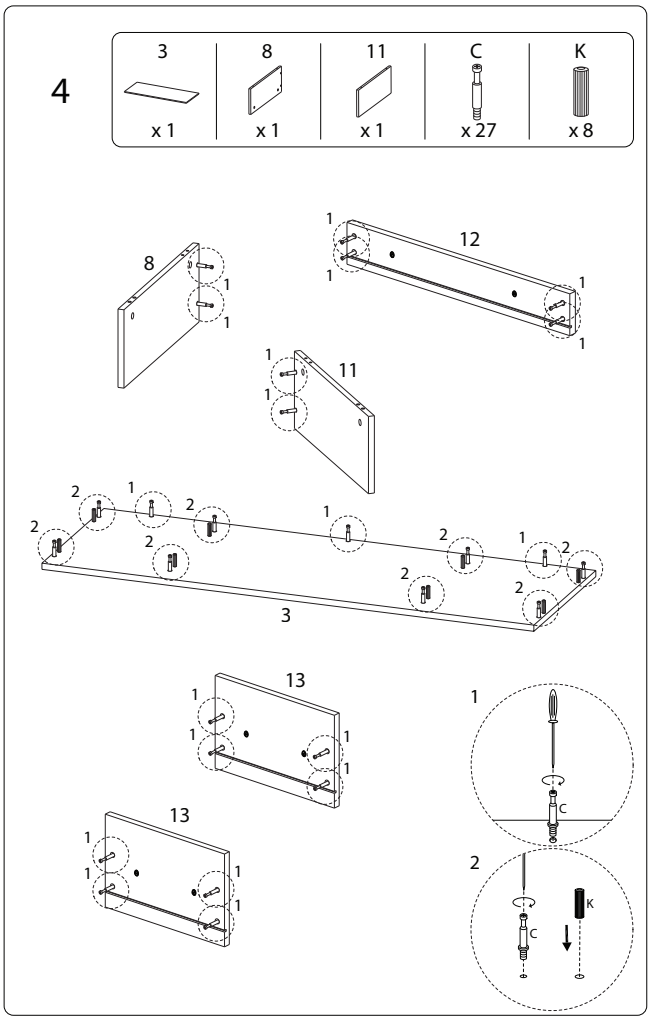
4
3
x 1
8
x 1
11
x 1
C
x 27
K
x 8
8
12
11
3
13
13
1
C
2
K
C

5

D
x 12

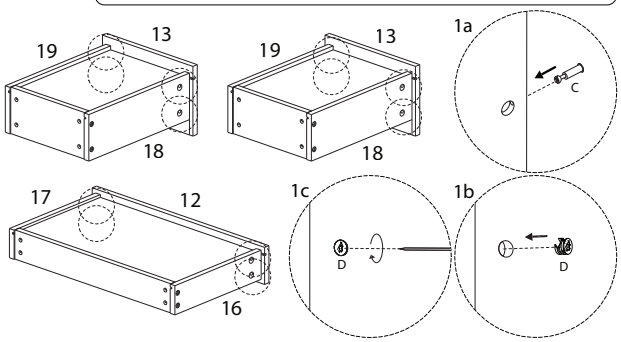

6

A	M
x 6	ST3 x 12 x 18

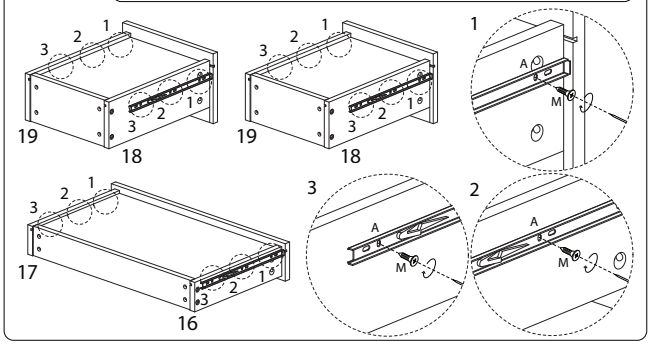

7

9	10	B	M
x 1	x 1	x 6	ST3 x 12 x 18

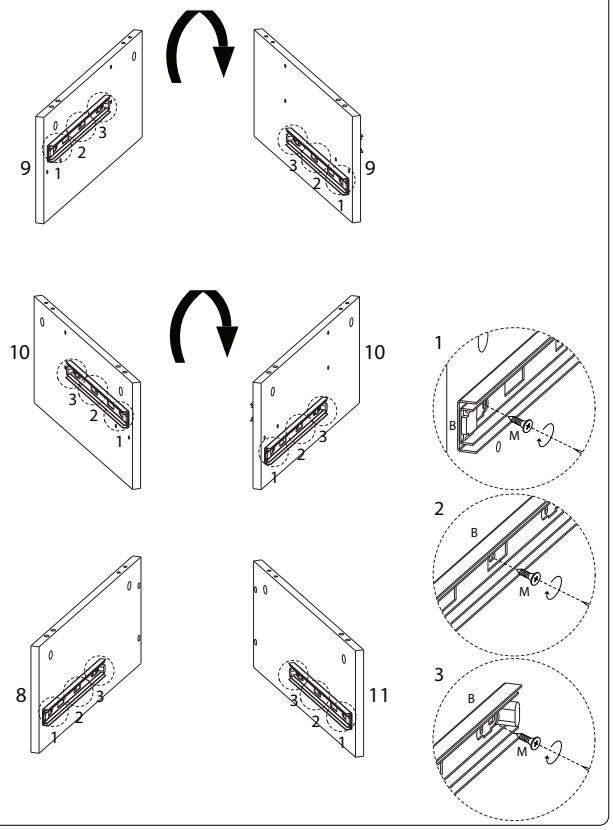

8

4	D
x 1	x 4

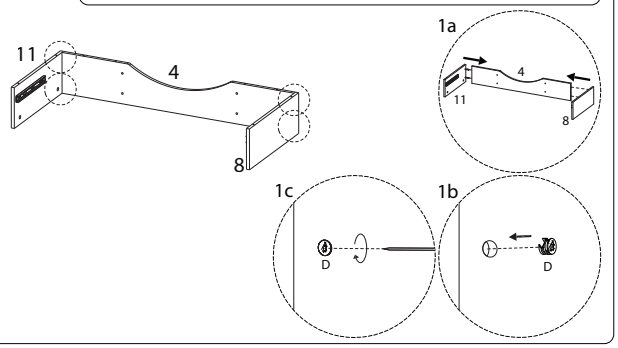

10

D
x 11

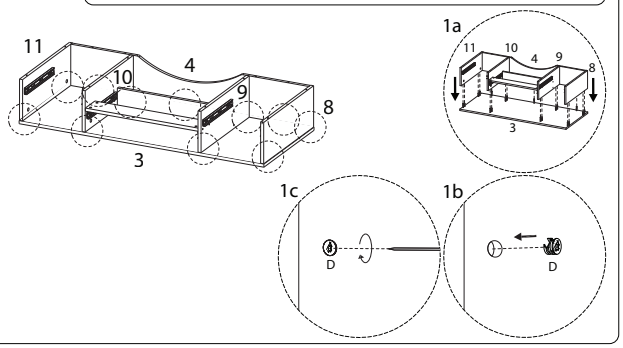

9

5	I
x 2	ST5 x 45 x 8

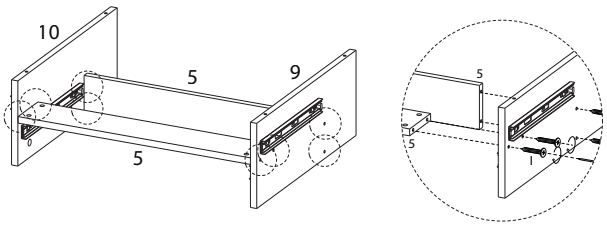

11

J
M7 x 38 x 4

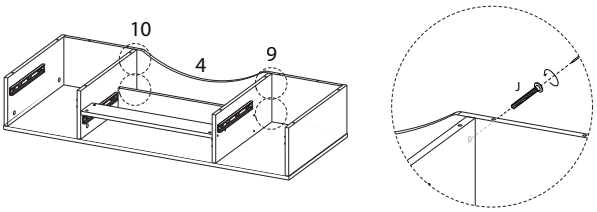

12

6	7	J
x 1	x 1	M7 x 38 x 12

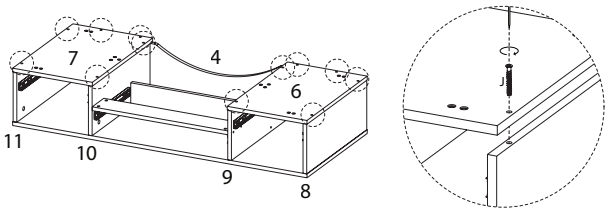

13

1	E	Q
x 2	M6 x 30 x 8	x 1

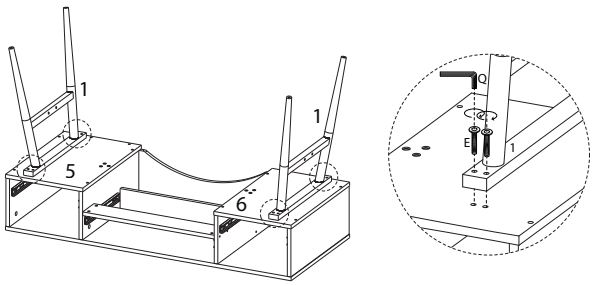

14

2	F	G	L	Q
x 2	M6 x 20 x 4	M6 x 12 x 6	x 4	x 1

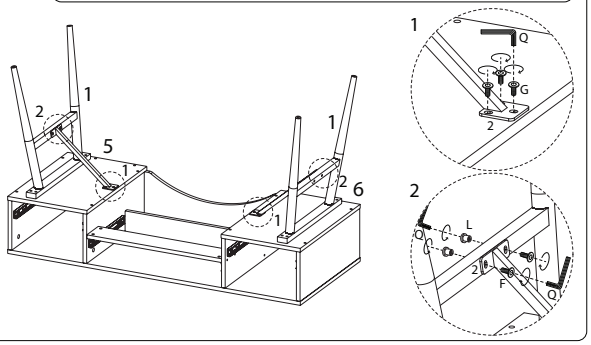

15

P
x 4

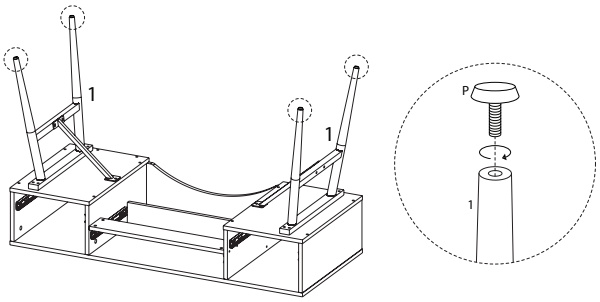
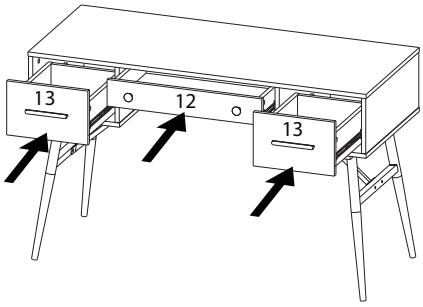
16