ASSEMBLY INSTRUCTION

STEP:1

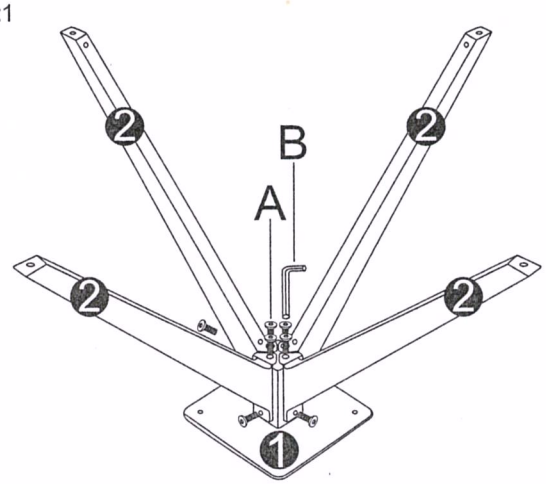

STEP:2

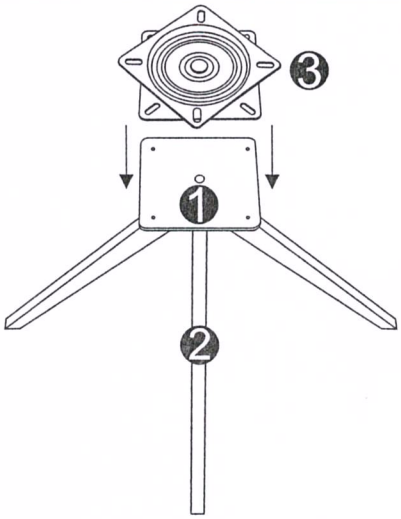

STEP:3

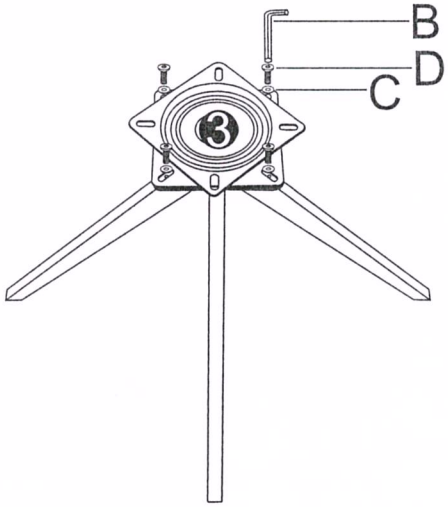

STEP:4

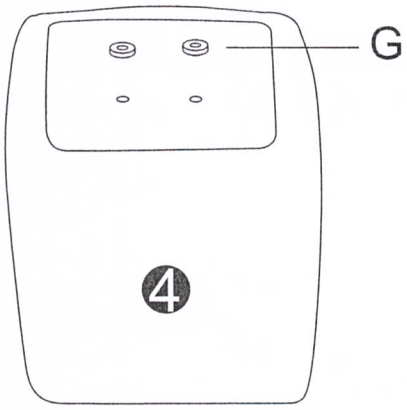

STEP:5

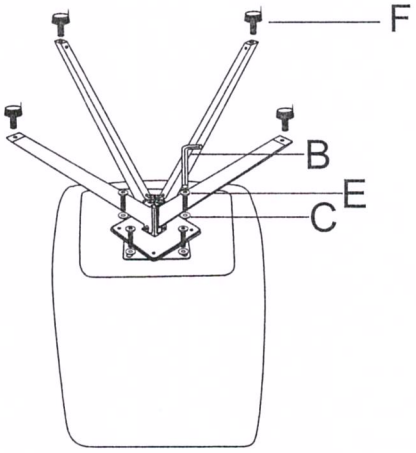

STEP:6

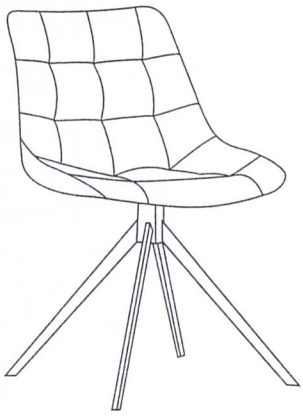

1 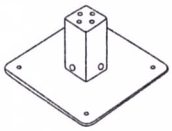 x1	2 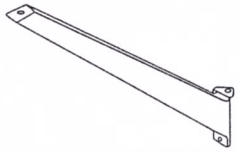 x4	3 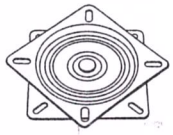 x1	4 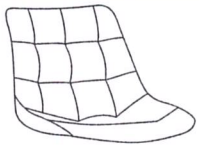 x1	
A  M6x13mm x8	B 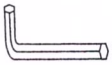 x1	C  M6xΦ16x1.5mm x8	D  M6x10mm x4	E  M6x20mm x4	F  x4	G  x2