HOLBECK

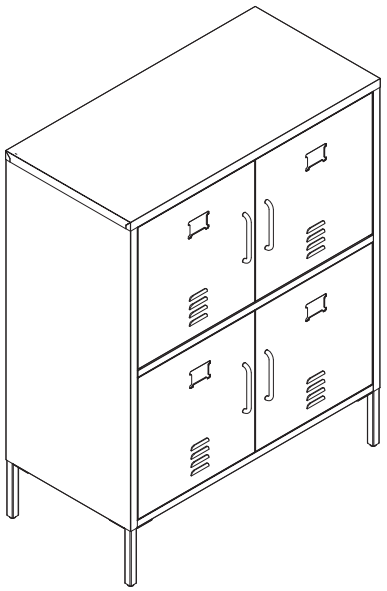

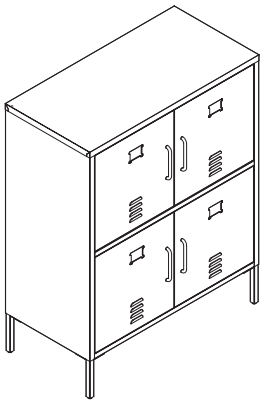

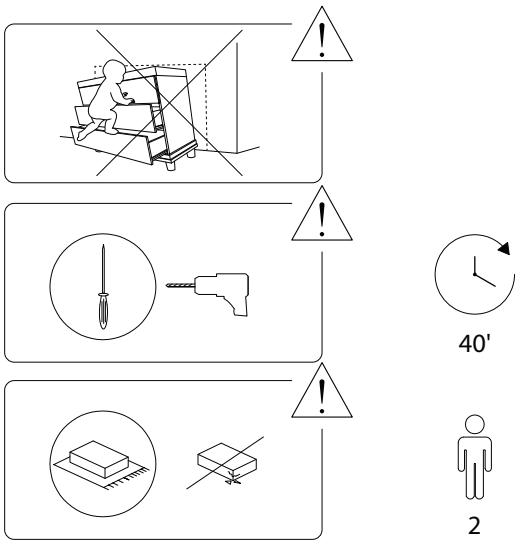

1/13

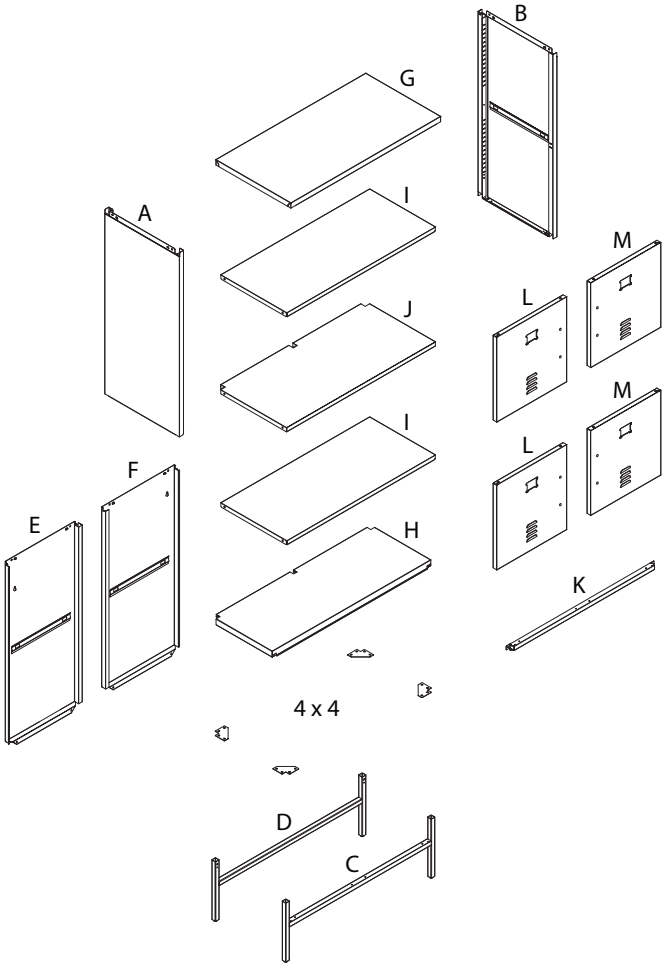

2/13

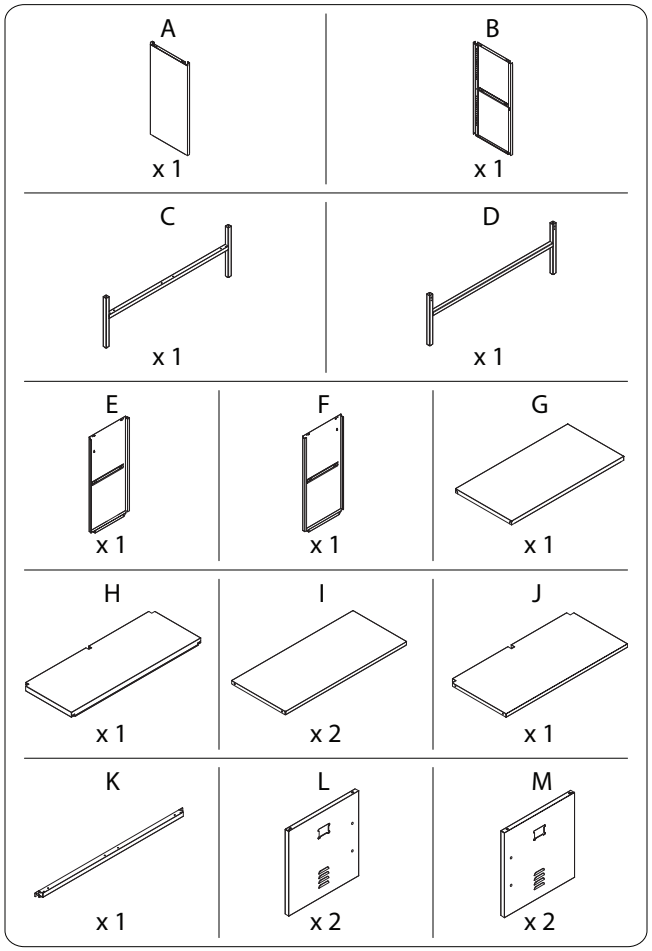

3/13

1 M4 x 10 x 22	2A x 4	
2B M5 x 4	3A x 4	
3B M4 x 8	3C M4 x 6 x 8	4 x 4
5A M4 x 35 x 2	5B M5 x 2	5C x 2
6 x 8	7A x 8	7B x 8

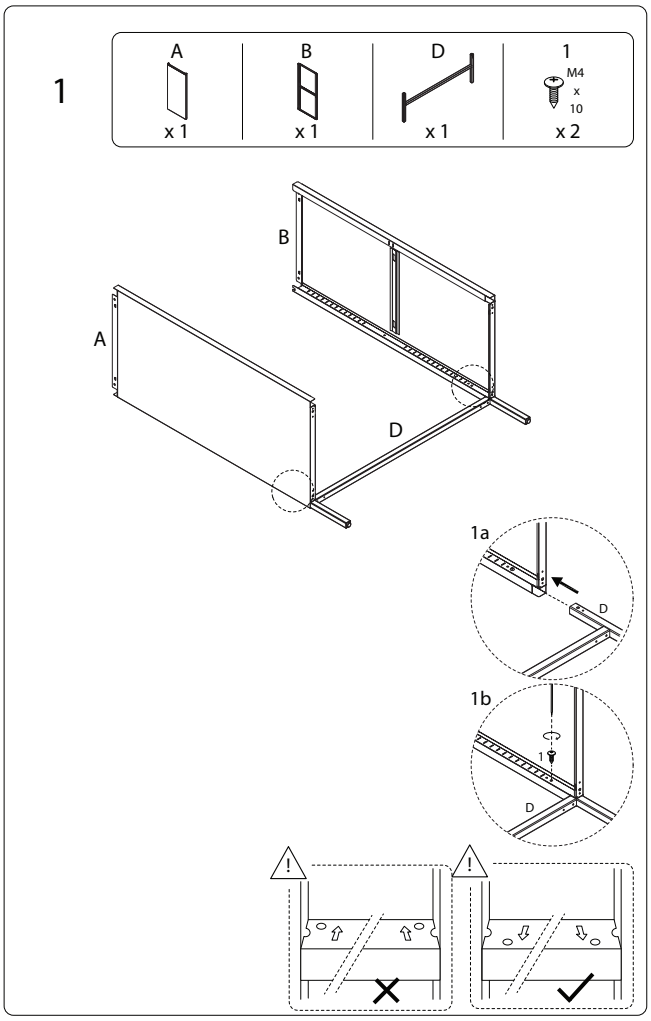

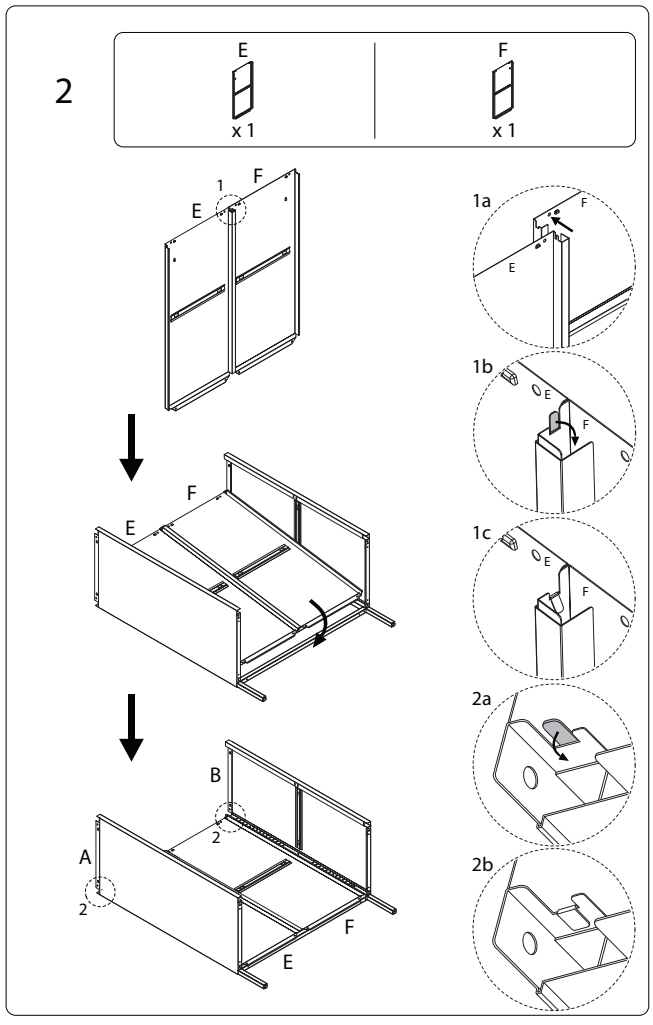

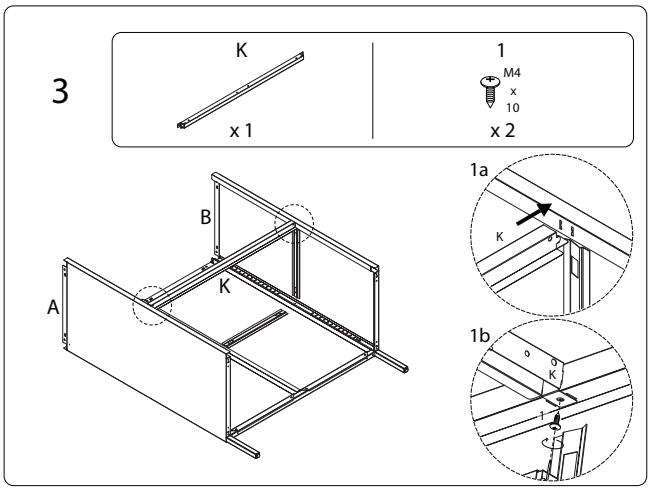

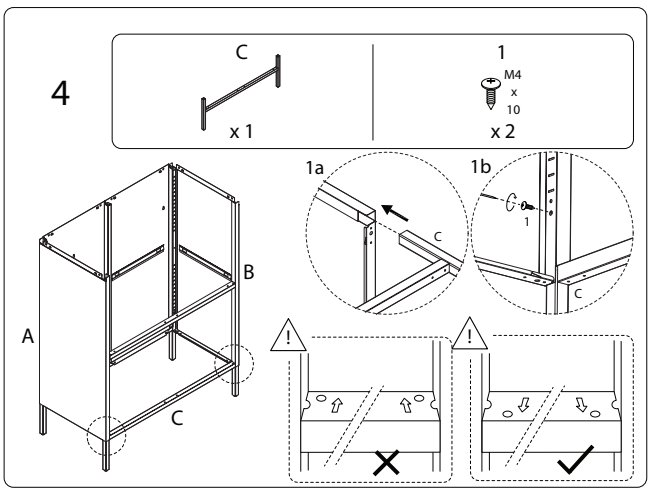

5

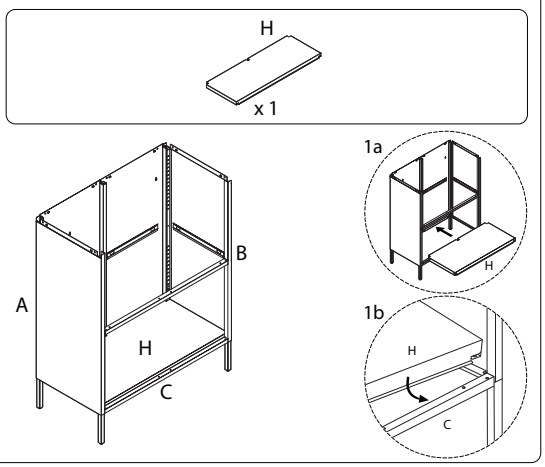

6

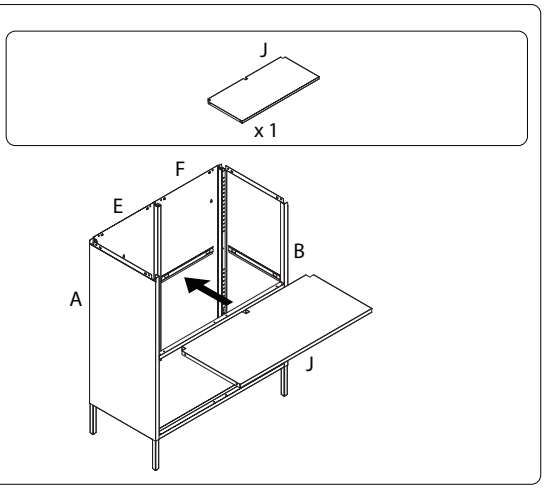

8/13

7

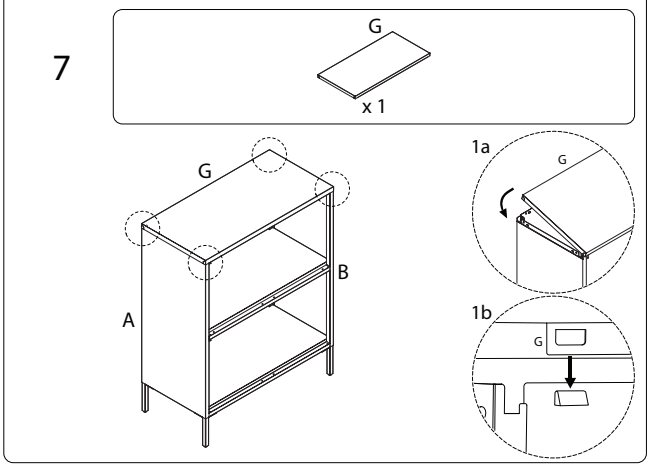

8

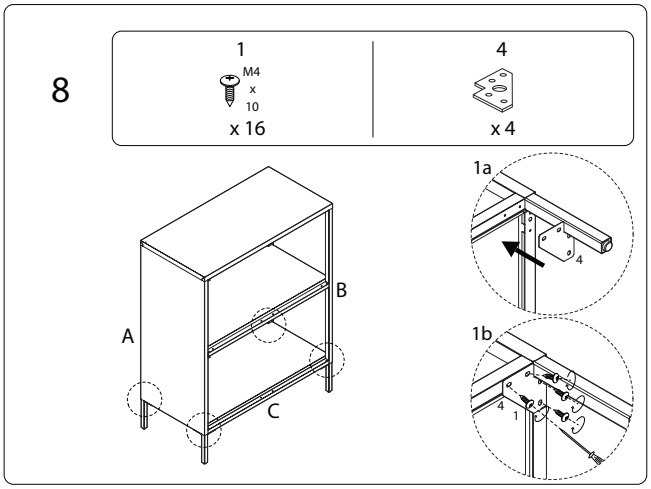

9/13

9

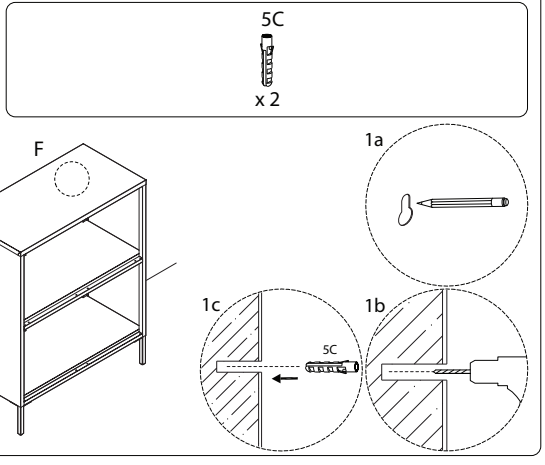

10

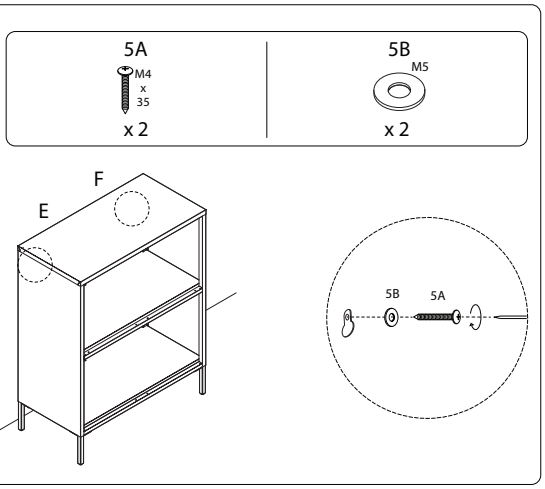

10/13

11

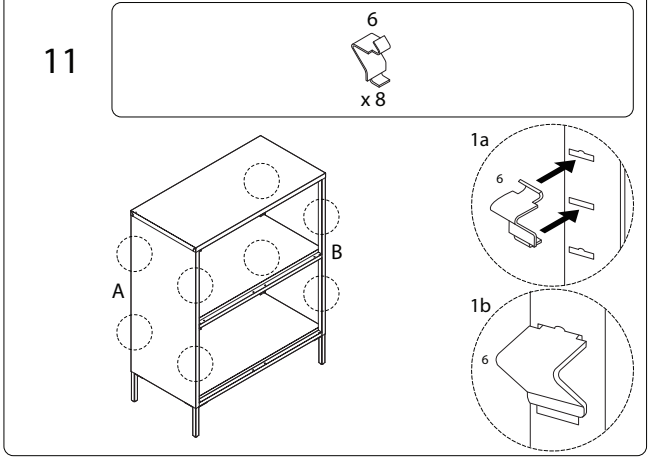

12

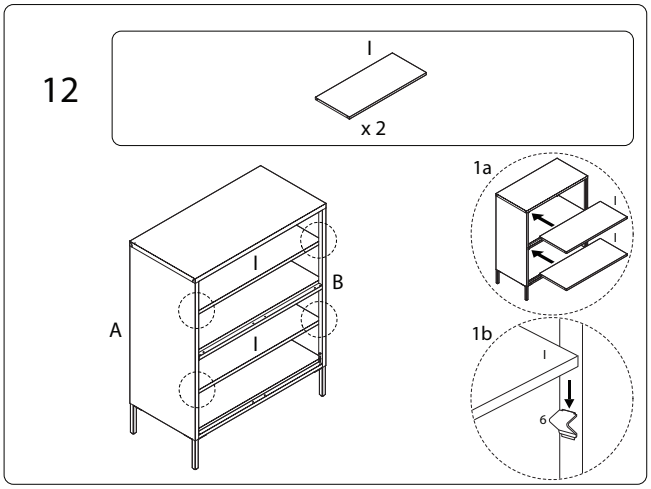

11/13

13 x 2

L	M	3A	3B	3C
x 1	x 1	x 2	x 4	x 4

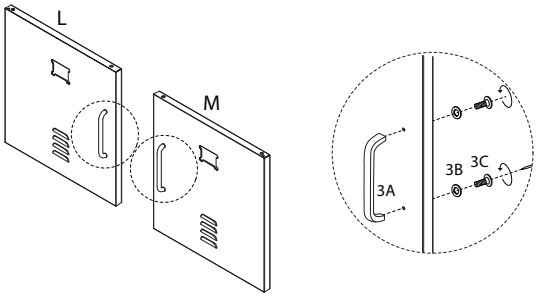

14 x 2

7A	7B
x 4	x 4

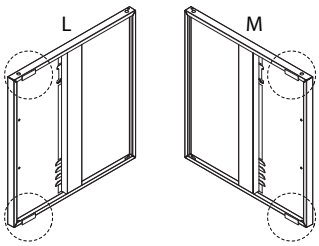

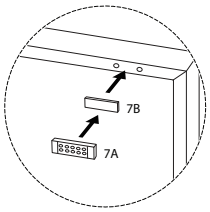

15

2A	2B
x 2	x 2

