# HAMILTON

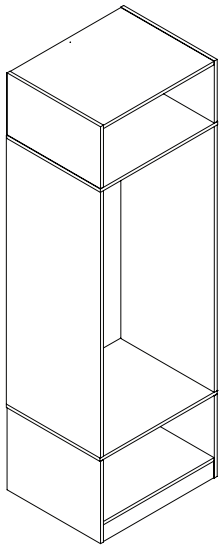



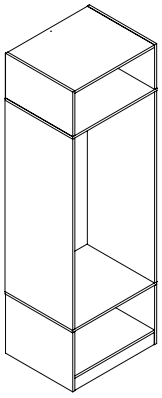

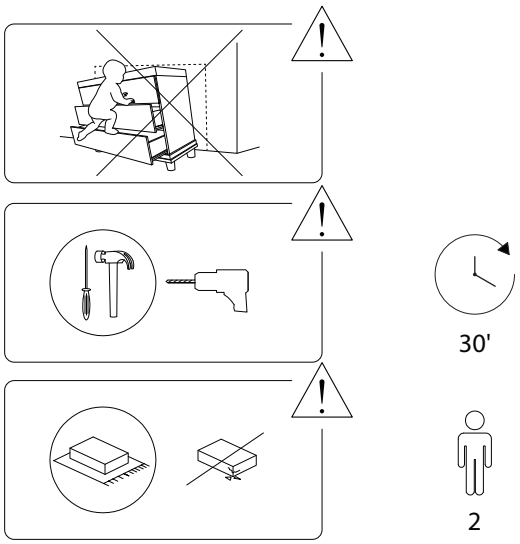
30'
2





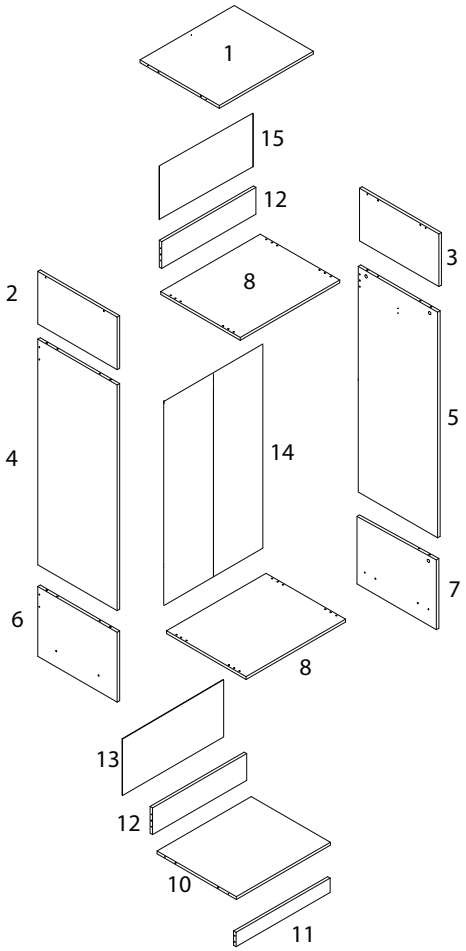
1
15
12
3
8
2
4
14
5
6
8
7
13
12
10
11





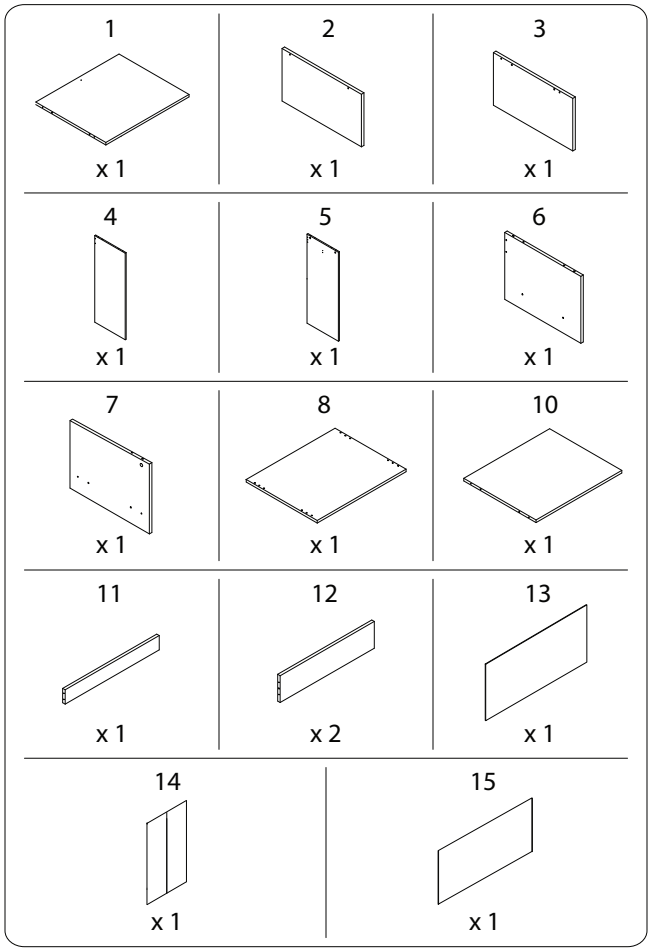
1
x 1
2
x 1
3
x 1
4
x 1
5
x 1
6
x 1
7
x 1
8
x 1
10
x 1
11
x 1
12
x 2
13
x 1
14
x 1
15
x 1

| A | B | C |
|---|---|---|
|  |  |  |
| x 8 | x 8 | x 16 |
| **D** | **E** | **F** |
|  M4 x 40 |  |  |
| x 24 | x 16 | x 4 |
| **G** | **H** | **I** |
|  |  M4 x 14 |  M4 x 30 |
| x 32 | x 1 | x 1 |
| **J** | **K** | **L** |
|  |  | 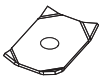 |
| x 1 | x 1 | x 6 |
| **M** | **N** | **O** | **P** |
|  |  |  |  M3 x 14 |
| x 8 | x 2 | x 1 | x 4 |





## 1

| 1 | 10 | 11 | 12 | C | H | J |
|---|---|---|---|---|---|---|
| x 1 | x 1 | x 1 | x 2 | x 16 | M4 x 14 x 1 | x 1 |

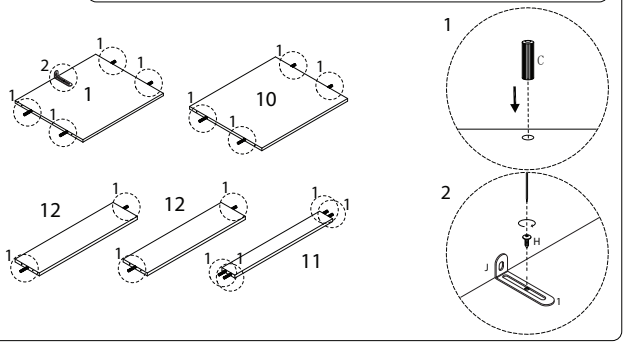


## 2

| 2 | 3 | 4 | 5 | C |
|---|---|---|---|---|
| x 1 | x 1 | x 1 | x 1 | x 8 |

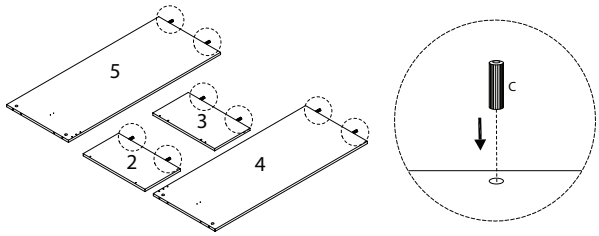






## 3

| D | E |
|---|---|
|  M4 x 40 x 4 |  x 4 |

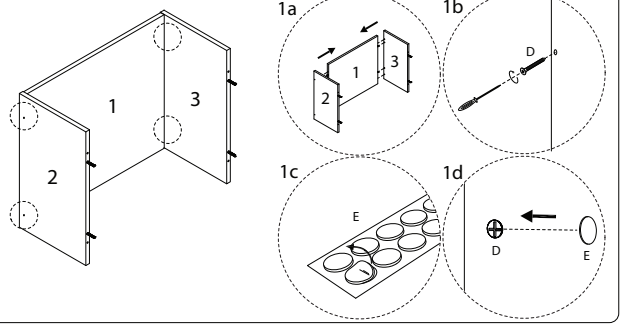


## 5

| D |
|---|
|  M4 x 40 x 4 |

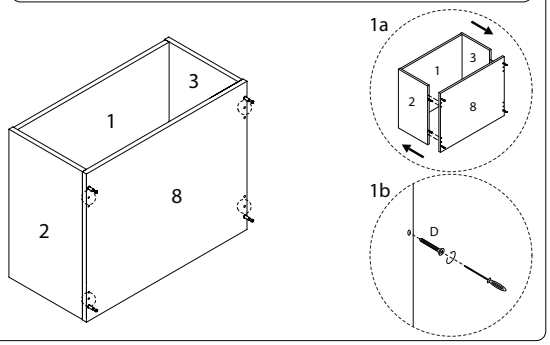


## 4 x 2

| 8 | A |
|---|---|
|  x 1 |  x 4 |

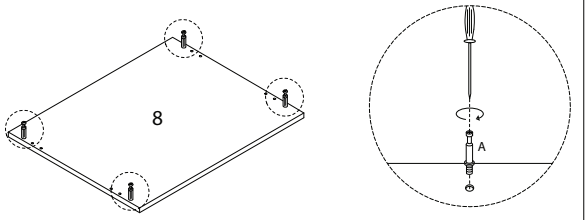






## 6

| N | P |
|---|---|
|  x 2 |  M3 x 14 x 4 |

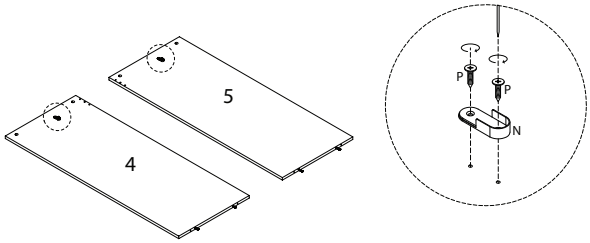

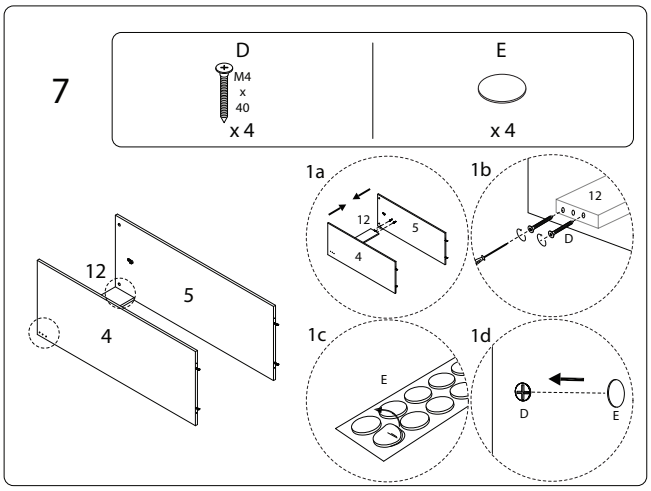
7
D
M4 x 40
x 4
E
x 4
1a
1b
1c
1d
12
5
4
D
E

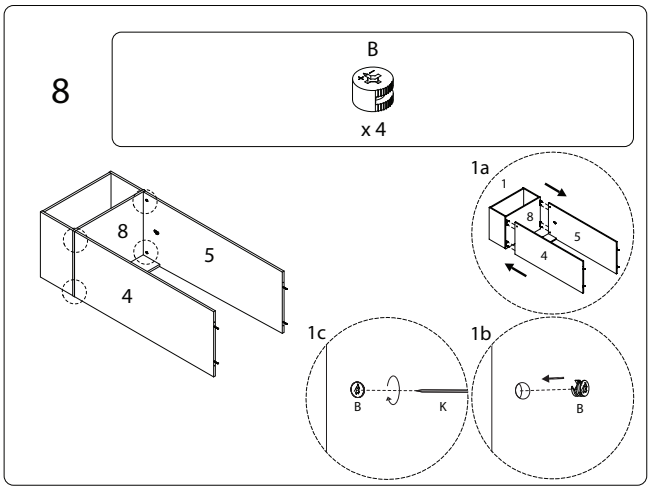
8
B
x 4
1a
1b
1c
8
5
4
B
K





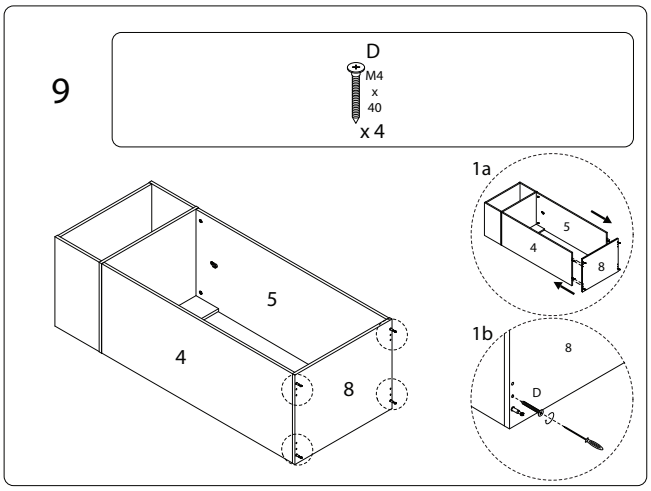
9
D
M4 x 40
x 4
1a
1b
5
4
8
D

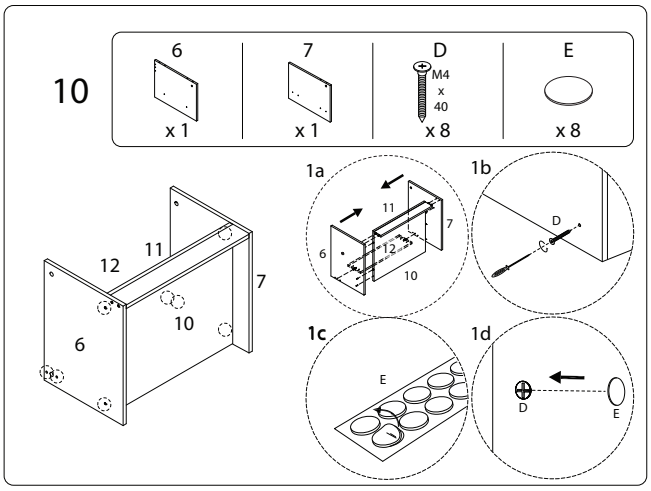
10
6
x 1
7
x 1
D
M4 x 40
x 8
E
x 8
1a
1b
1c
1d
12
11
7
10
6
E
D





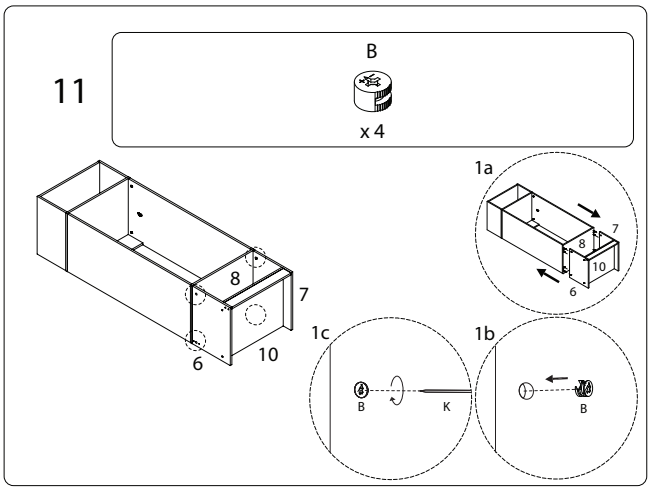
11
B
x 4
1a
1b
1c
8
7
6
10
B
K

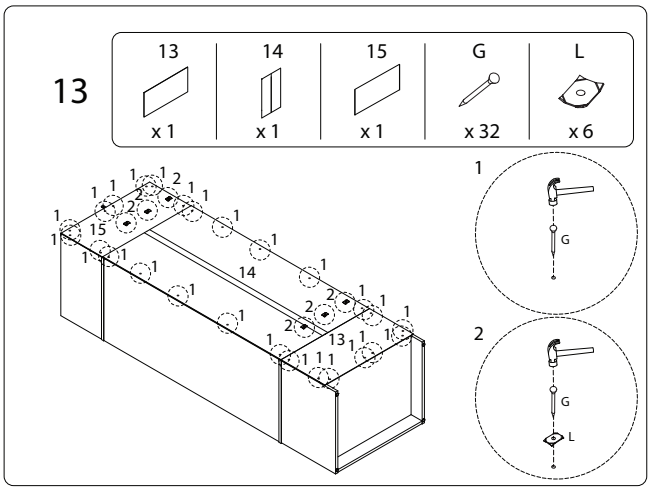
13
x 1
14
x 1
15
x 1
G
x 32
L
x 6
1
2
G
L

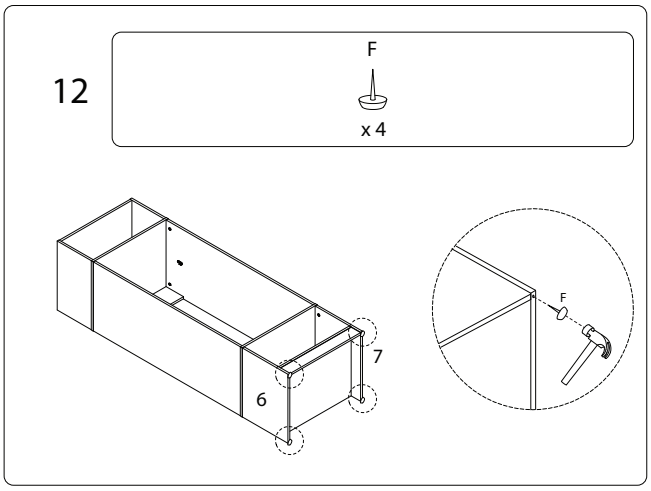
12
F
x 4
7
6
F





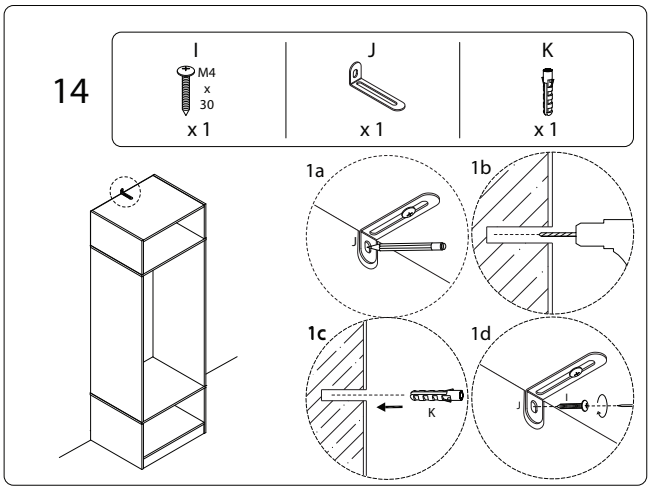
14
I
M4 x 30
x 1
J
x 1
K
x 1
1a
1b
1c
1d
J
K

15

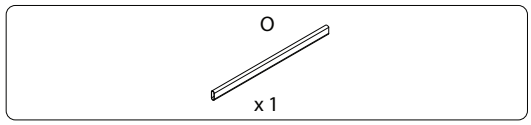


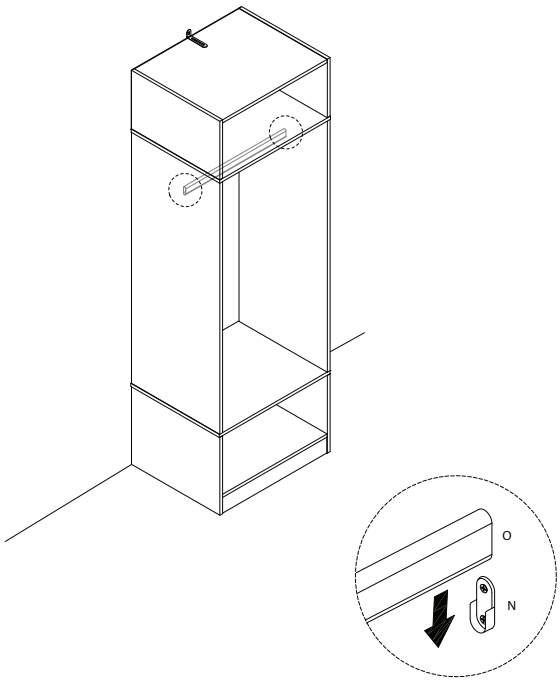




2949/HAMILTON/210926