DANDY

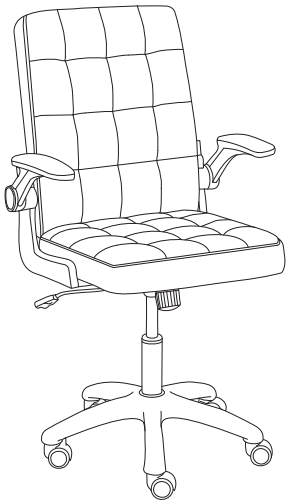

1/8

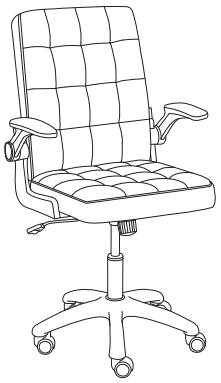

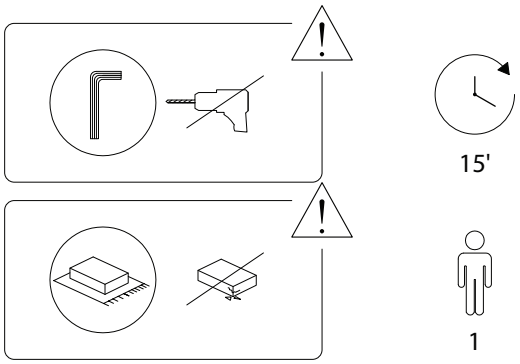

2/8

2739/DANDY/070426

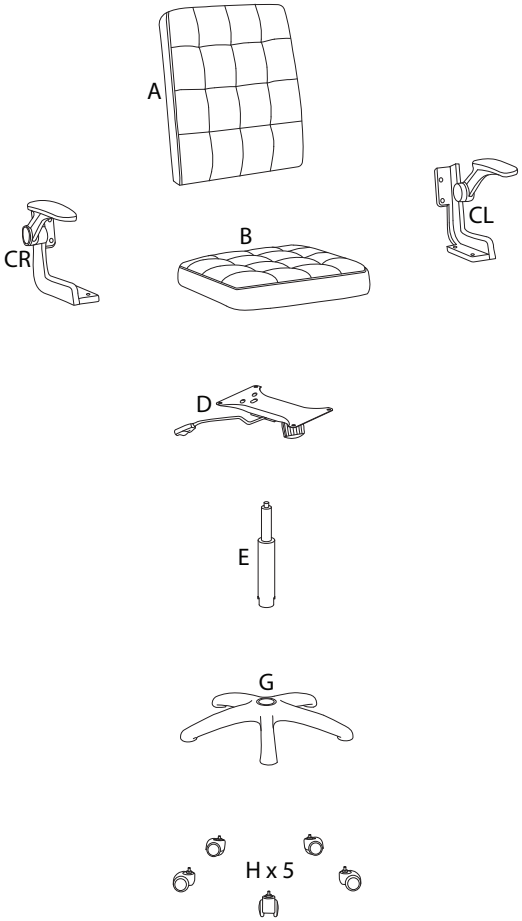

3/8

2739/DANDY/070426

A x 1	B x 1	CL x 1
CR x 1	D x 1	E x 1
F x 1	G x 1	H x 5
I M6 x 30 x 8	J M6 x 20 x 4	

4/8

2739/DANDY/070426

1

G x 1

H x 5

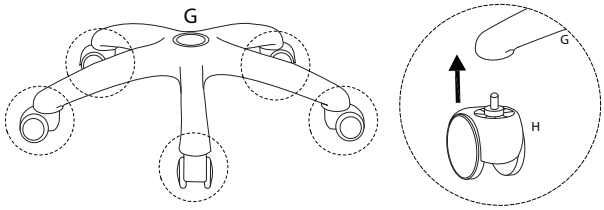

3

A x 1

CL x 1

CR x 1

F x 1

I M6 x 30 x 4

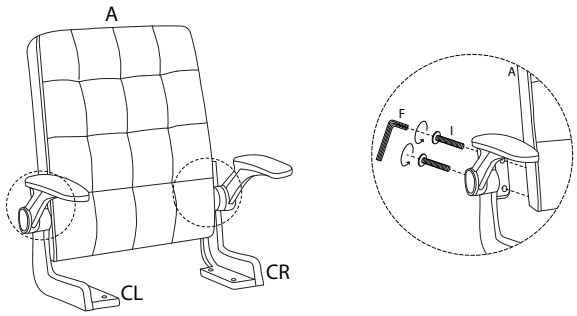

2

E x 1

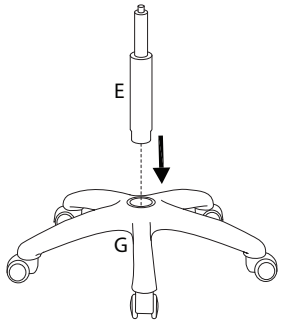

4

B x 1

F x 1

I M6 x 30 x 4

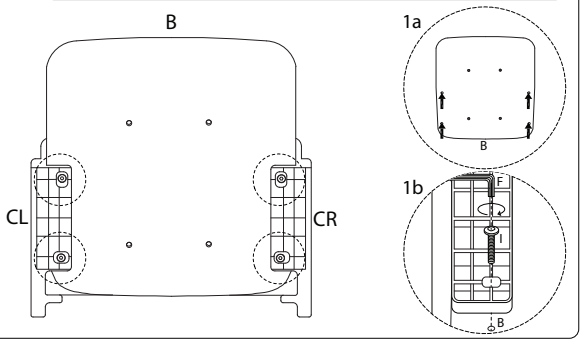

2739/DANDY/070426

2739/DANDY/070426

5

D x 1

F x 1

J M6 x 20 x 4

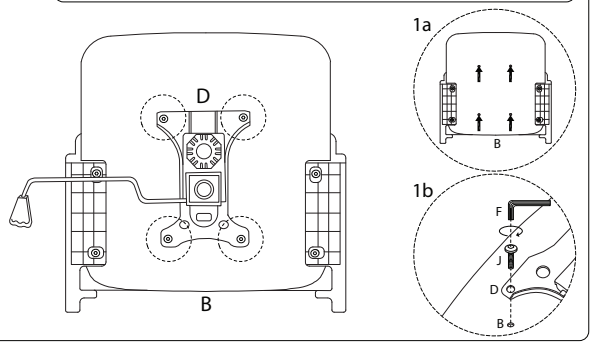

!

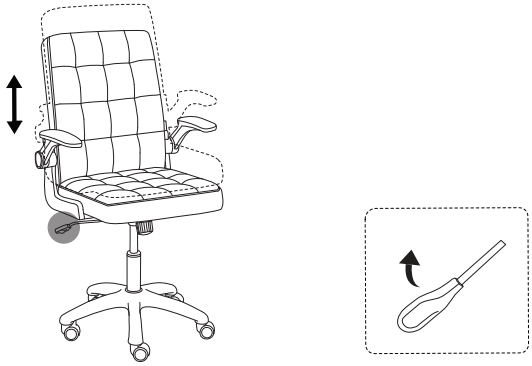

6

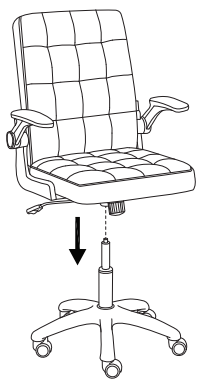

!

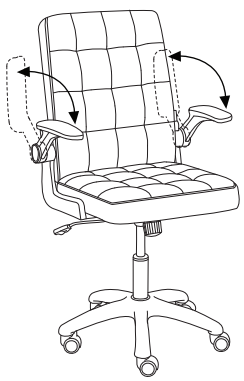

2739/DANDY/070426

2739/DANDY/070426