SILVERTON

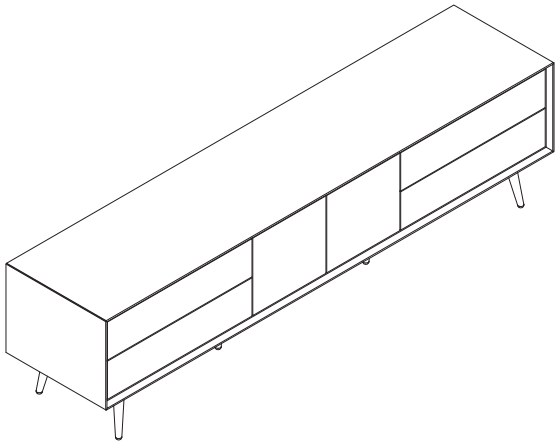

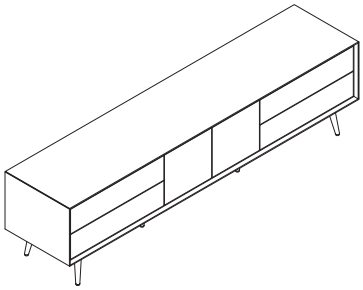

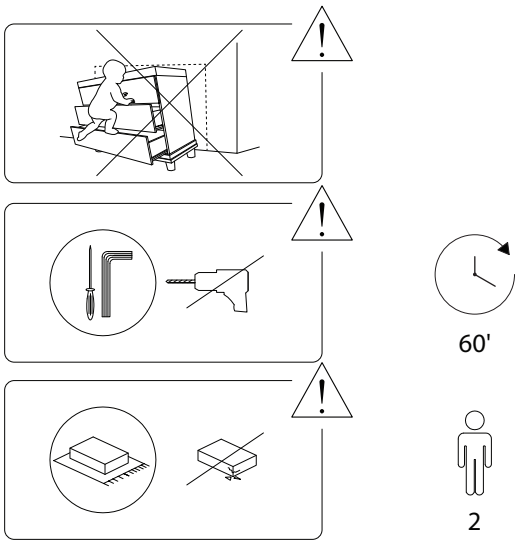
60'
2

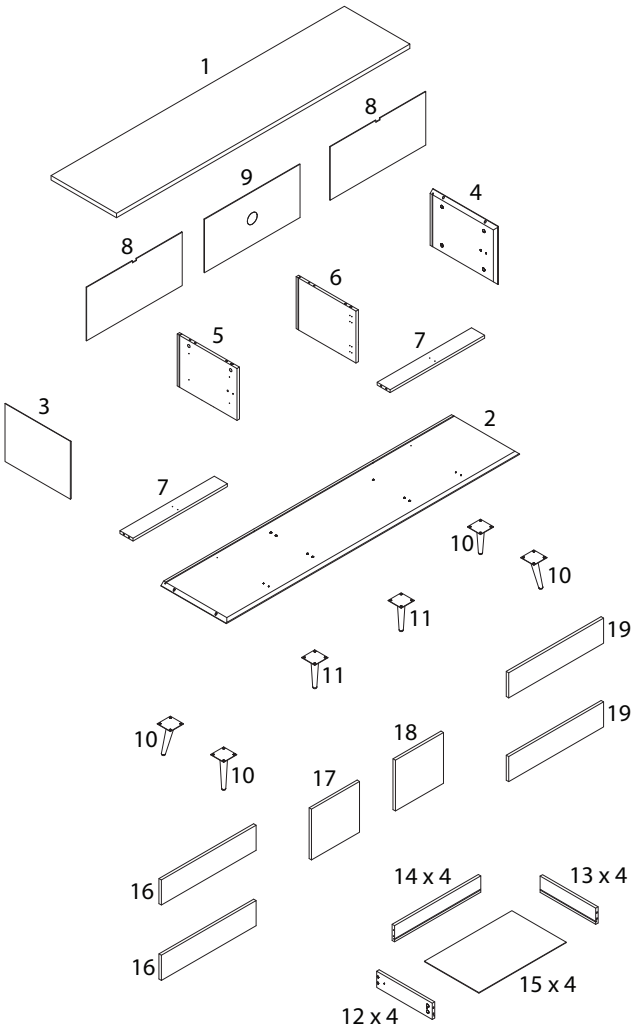
1
8
9
4
8
6
5
7
3
2
7
10
10
11
19
11
19
10
18
10
17
16
14 x 4
13 x 4
16
15 x 4
12 x 4

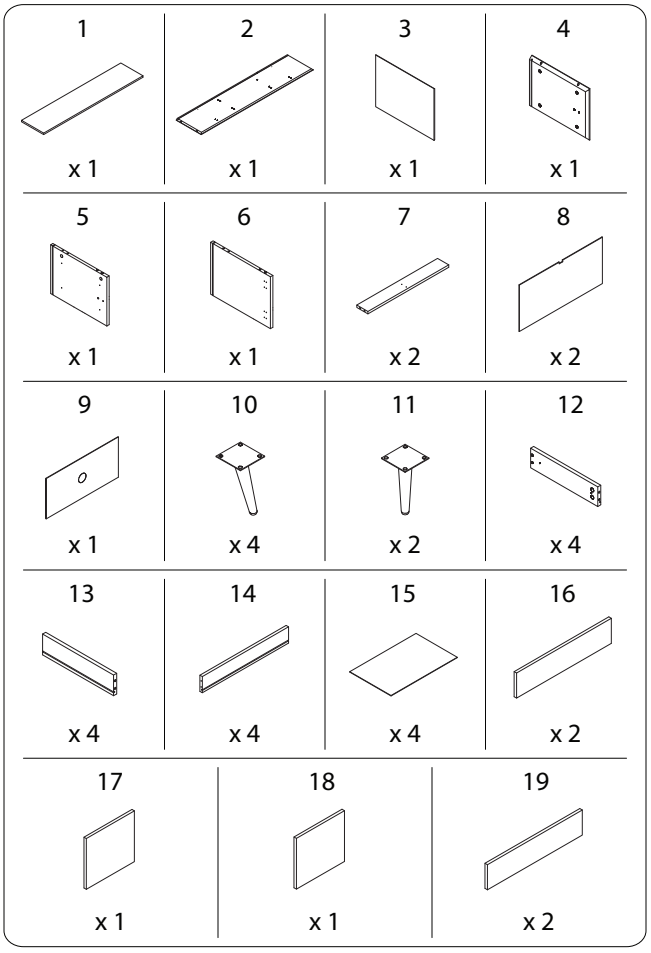
1 x 1
2 x 1
3 x 1
4 x 1
5 x 1
6 x 1
7 x 2
8 x 2
9 x 1
10 x 4
11 x 2
12 x 4
13 x 4
14 x 4
15 x 4
16 x 2
17 x 1
18 x 1
19 x 2

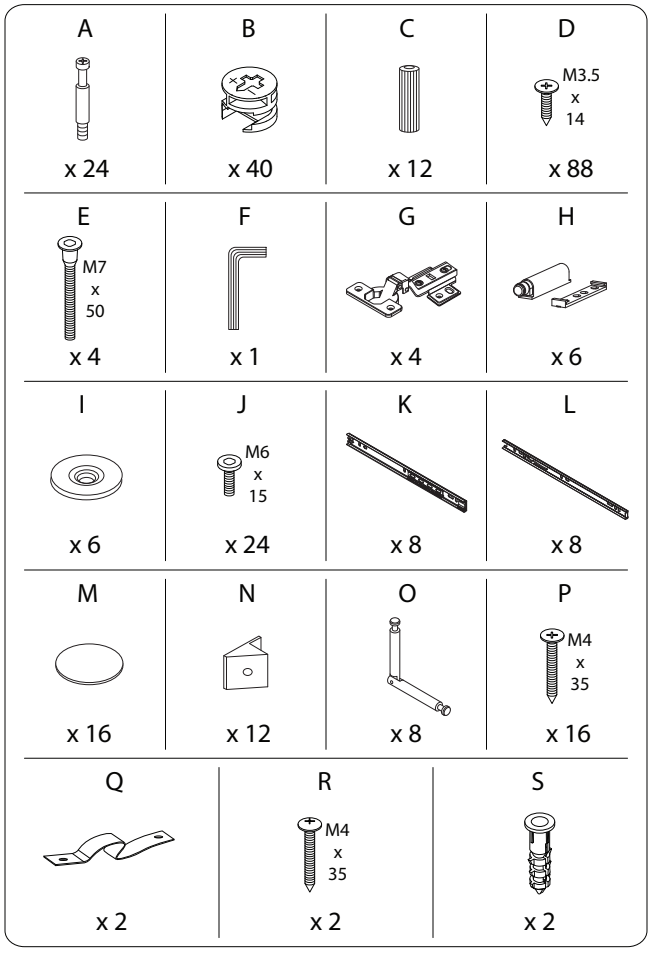
A
x 24
B
x 40
C
x 12
D
M3.5 x 14
x 88
E
M7 x 50
x 4
F
x 1
G
x 4
H
x 6
I
x 6
J
M6 x 15
x 24
K
x 8
L
x 8
M
x 16
N
x 12
O
x 8
P
M4 x 35
x 16
Q
x 2
R
M4 x 35
x 2
S
x 2

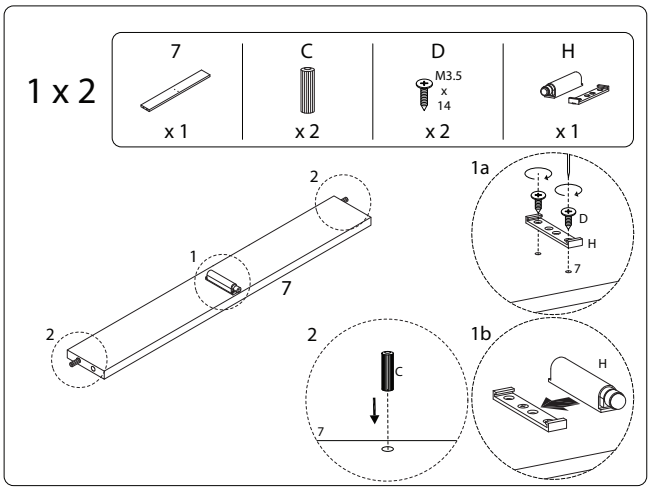
1 x 2
7
x 1
C
x 2
D
M3.5 x 14
x 2
H
x 1
1a
1b

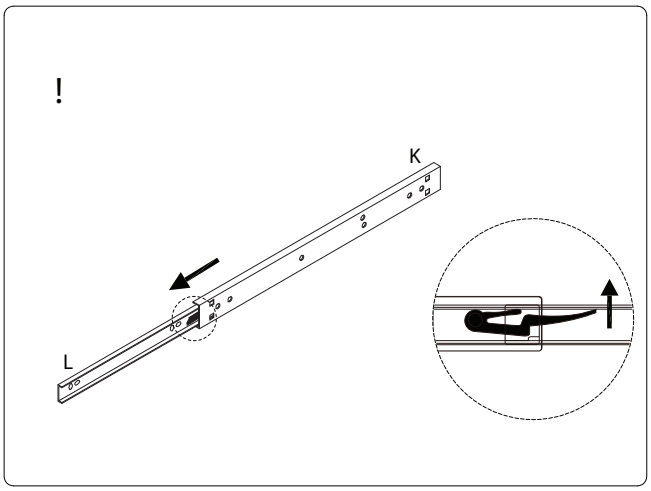
!
K
L

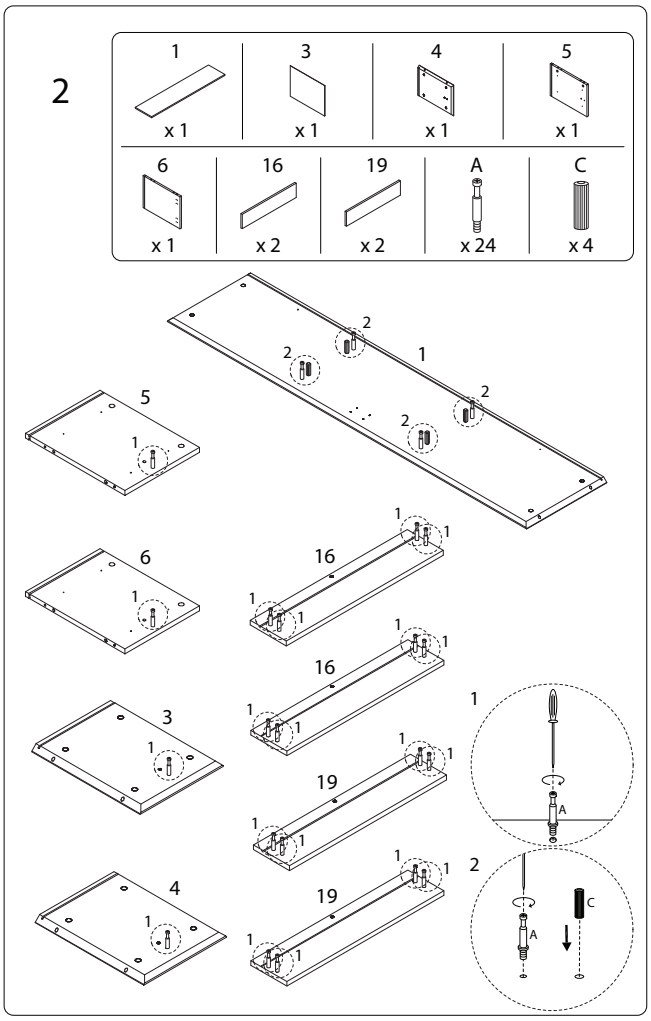
2
1
x 1
3
x 1
4
x 1
5
x 1
6
x 1
16
x 2
19
x 2
A
x 24
C
x 4

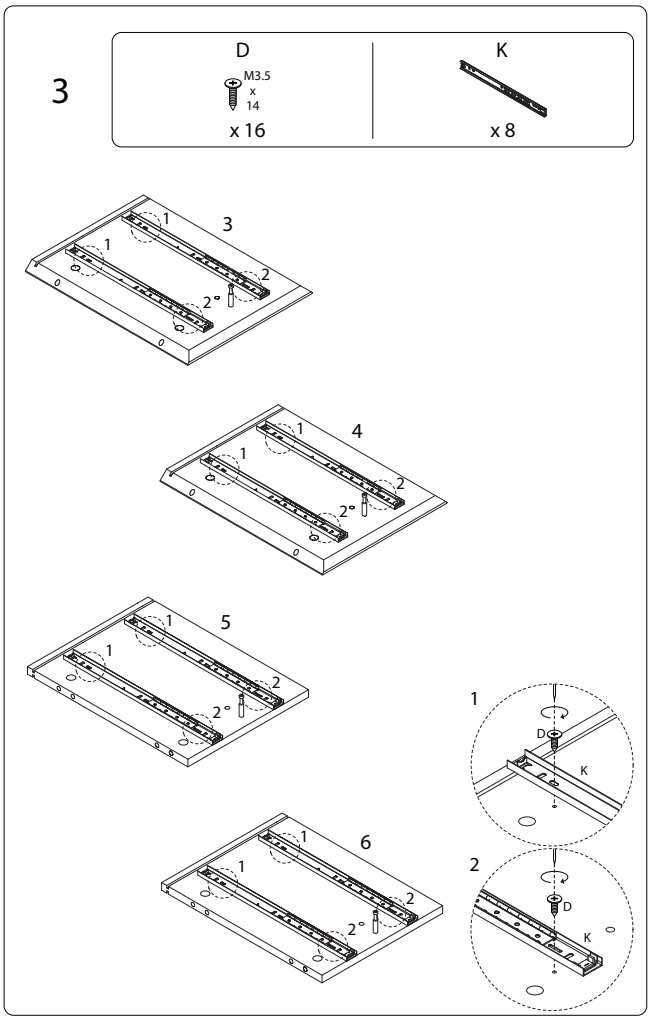
3
D
M3.5 x 14
x 16
K
x 8

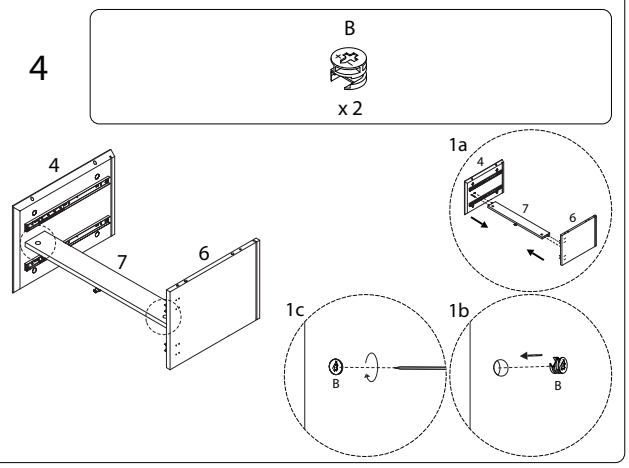
4
B
x 2
1a
1c
1b

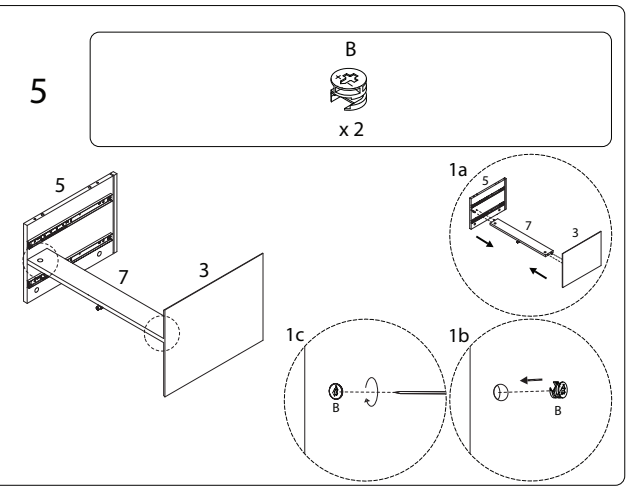
5
B
x 2
1a
1c
1b

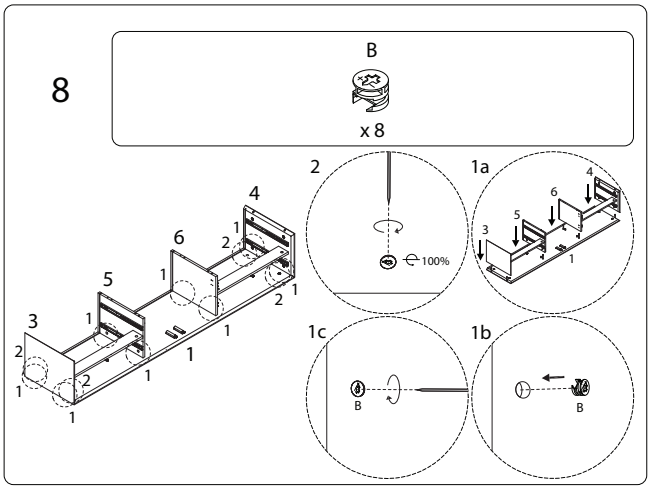
8
B
x 8
2
1a
1c
1b
100%

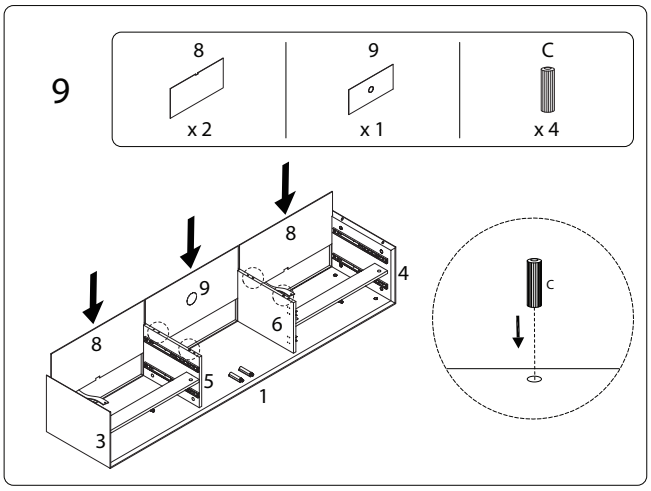
9
8
x 2
9
x 1
C
x 4

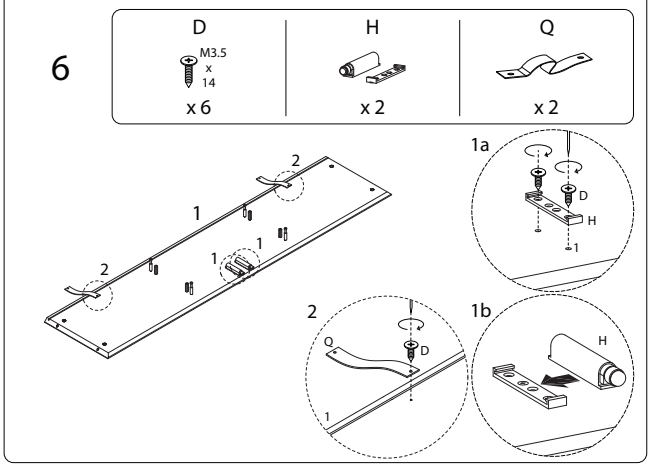
6
D
M3.5
x
14
x 6
H
x 2
Q
x 2
1a
1b

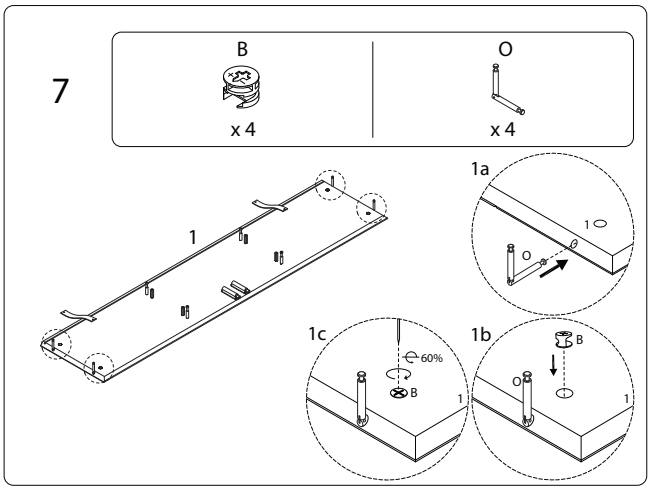
7
B
x 4
O
x 4
1a
1c
1b
60%

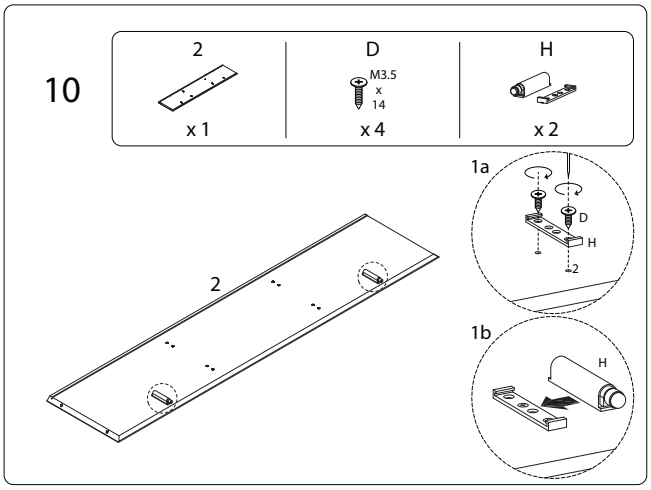
10
2
x 1
D
M3.5
x
14
x 4
H
x 2
1a
1b

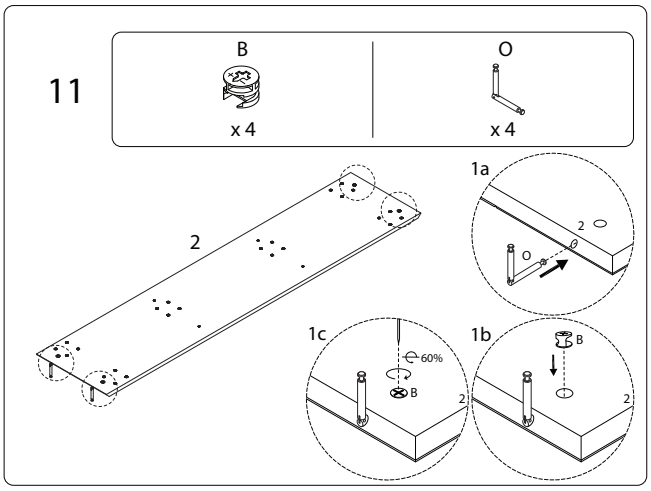
11
B
x 4
O
x 4
1a
1c
1b
60%

12

B
x 4

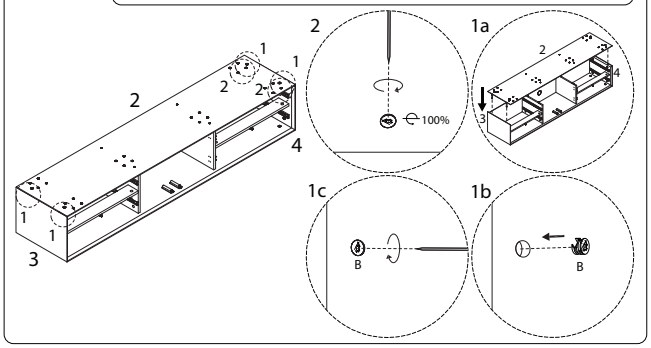

13

E	F
M7 x 50	
x 4	x 1

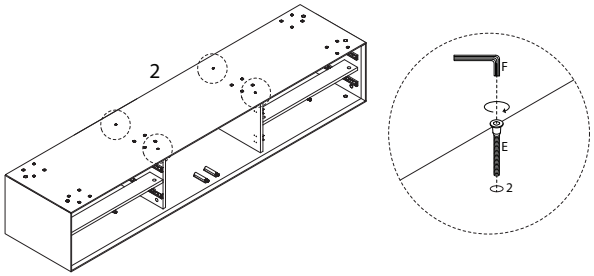

14

10	11	F	J
			M6 x 15
x 4	x 2	x 1	x 24

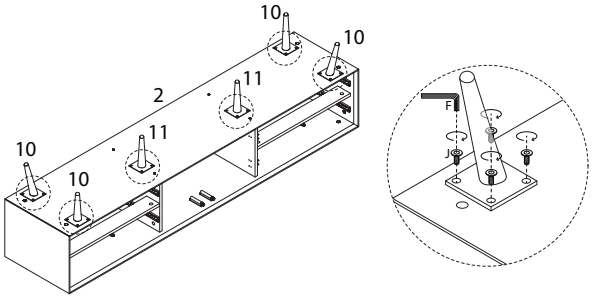

15

D	N
M3.5 x 14	
x 12	x 12

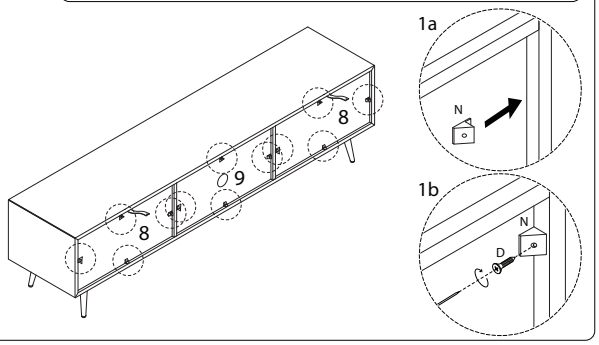

16

R	S
M4 x 35	
x 2	x 2

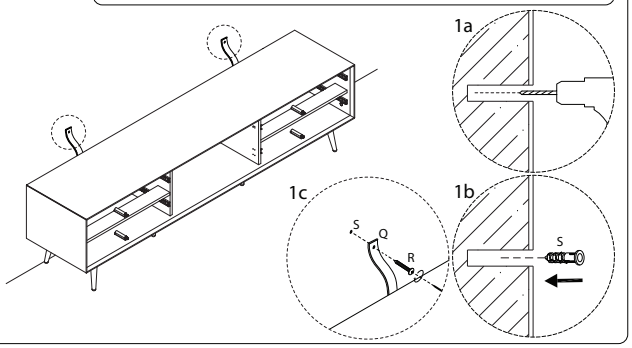

18 x 2

D	I
M3.5 x 14	
x 2	x 2

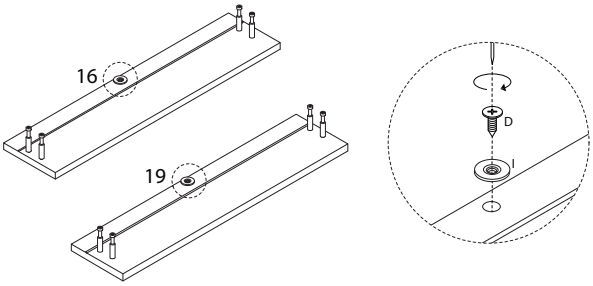

17 x 4

12	13	14	15	P
				M4 x 35
x 1	x 1	x 1	x 1	x 4

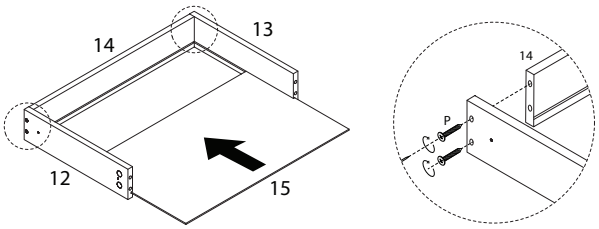

19 x 2

B
x 8

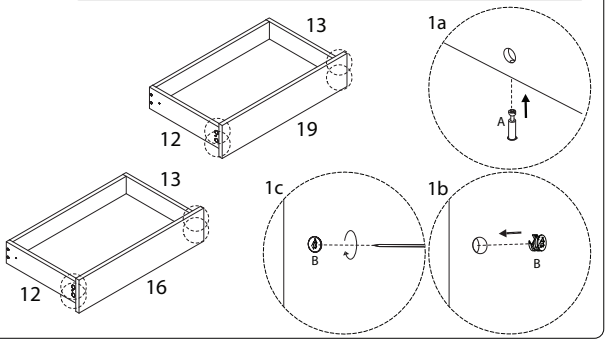

20 x 2

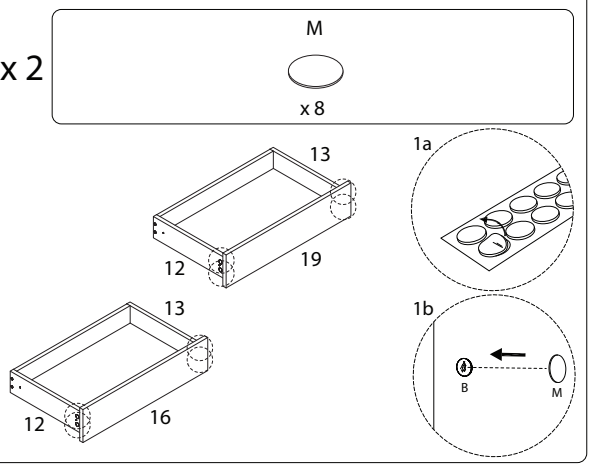

21 x 2

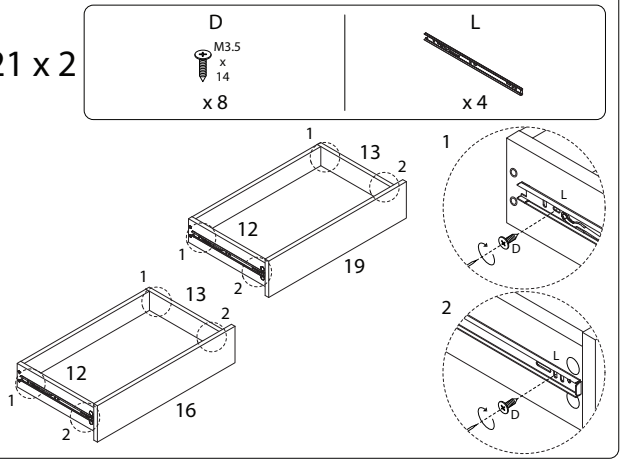

22

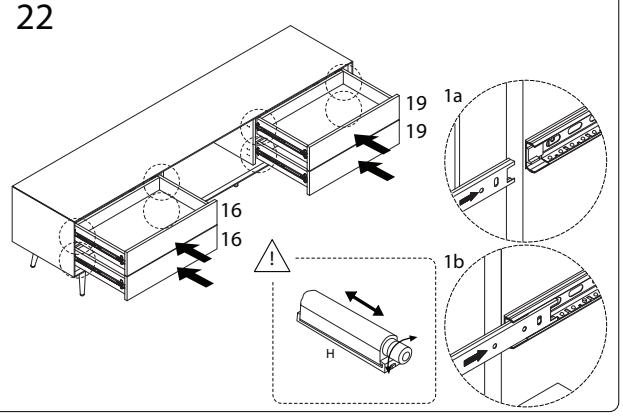

23

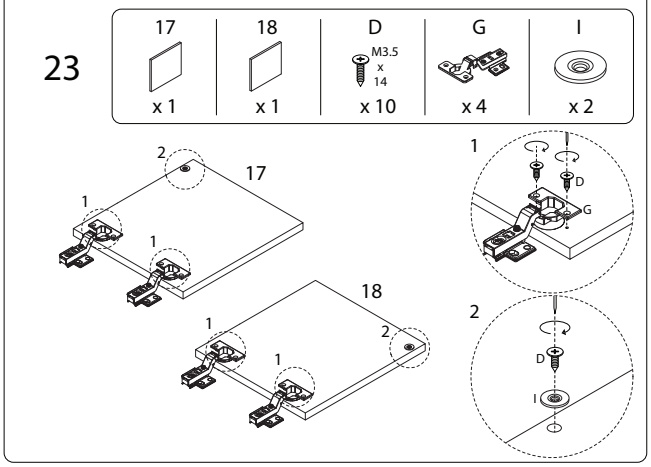

24

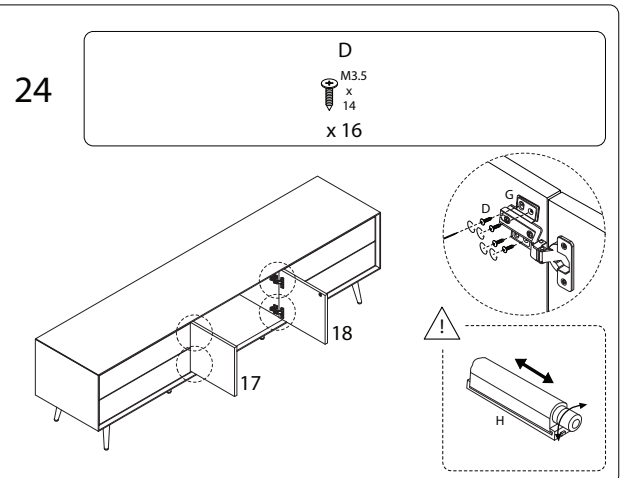

!

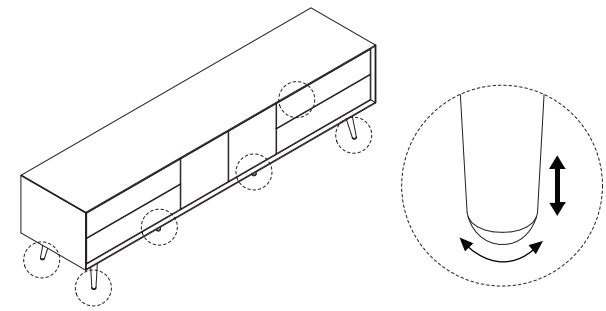
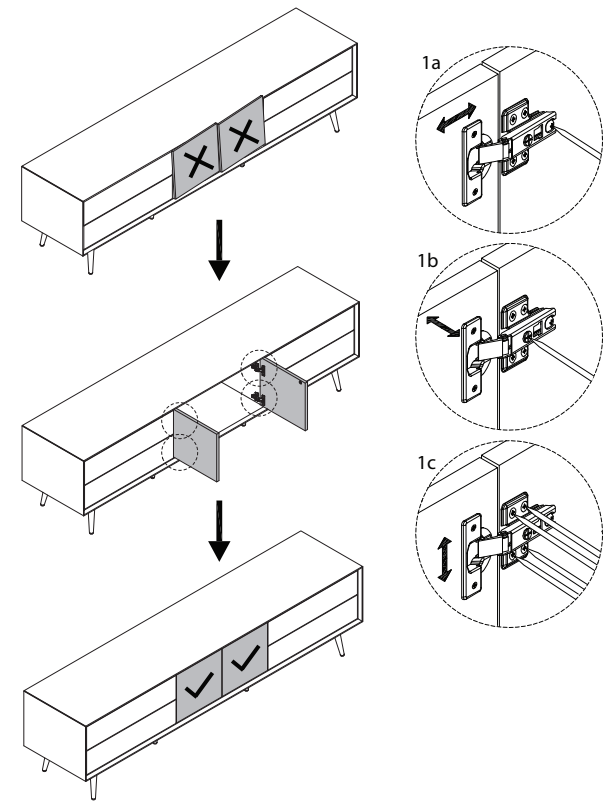
25