# MADISON

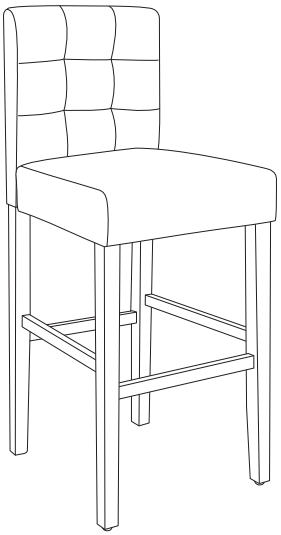

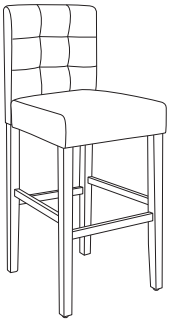

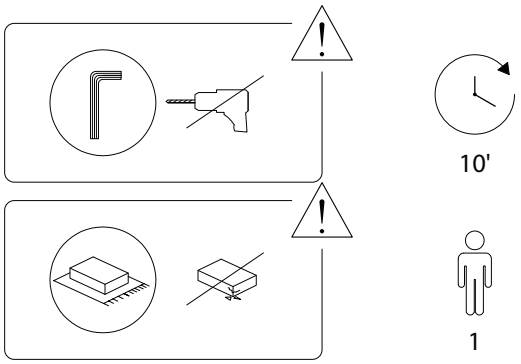


1/5



| A | B | C | D | E |
|---|---|---|---|---|
| x 1 | x 1 | x 2 | x 2 | x 1 |

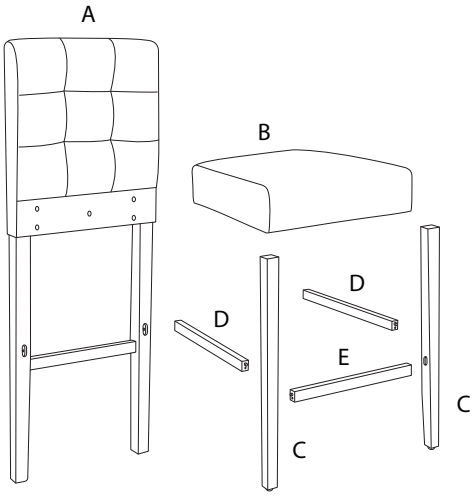


| F | G | H | J | K | L |
|---|---|---|---|---|---|
| M8 x 55 | M8 x 70 | M4 x 45 | | | |
| x 1 | x 8 | x 6 | x 9 | x 9 | x 1 |

2/5



## 1

| A | B | F | G | J | K | L |
|---|---|---|---|---|---|---|
| | | M8 x 55 | M8 x 70 | | | |
| x 1 | x 1 | x 1 | x 4 | x 5 | x 5 | x 1 |

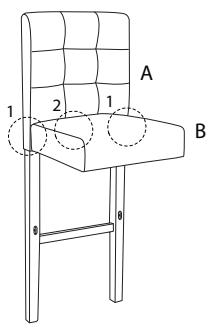


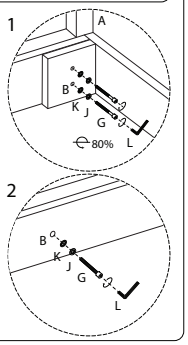


## 2

| C | G | J | K | L |
|---|---|---|---|---|
| | M8 x 70 | | | |
| x 2 | x 4 | x 4 | x 4 | x 1 |

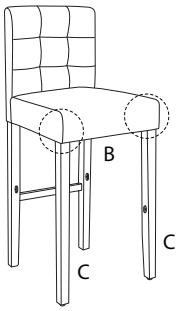


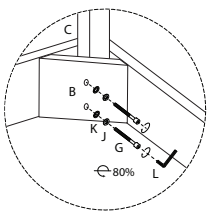


3/5

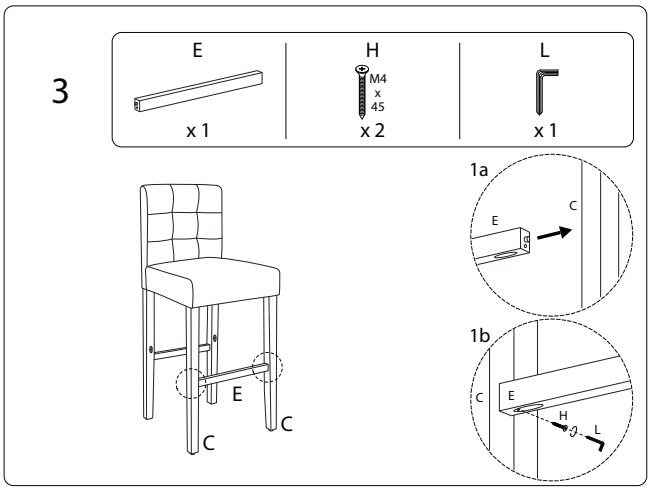
3
E
x 1
H
M4
x
45
x 2
L
x 1
1a
E
C
1b
C
E
H
L
E
C
C

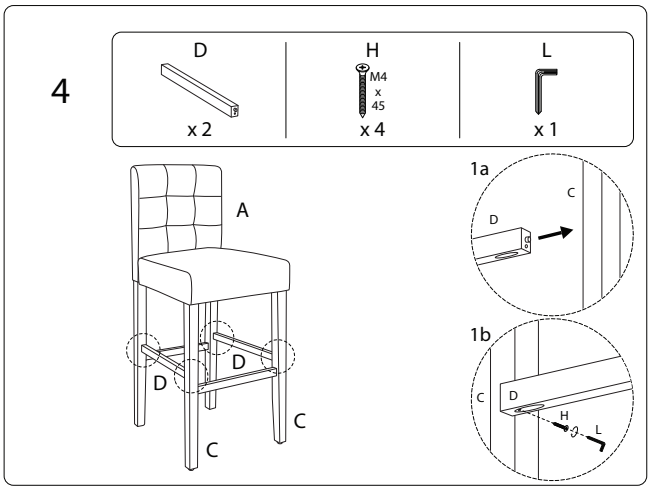
4
D
x 2
H
M4
x
45
x 4
L
x 1
1a
D
C
1b
C
D
H
L
A
D
D
C
C

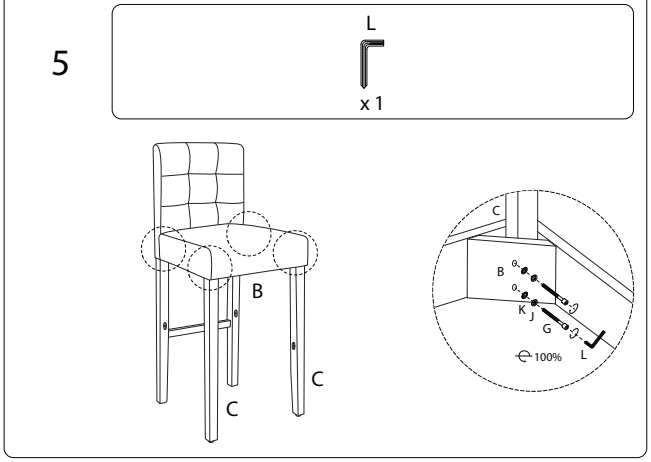
5
L
x 1
B
C
C
C
B
K
J
G
L
100%