

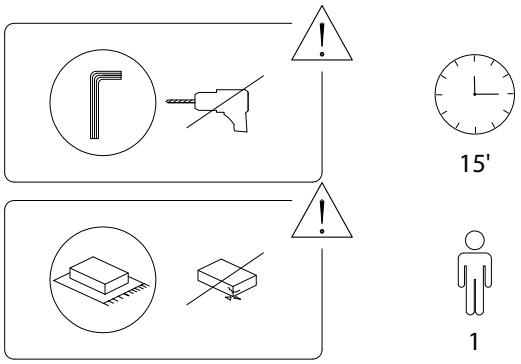
15'
1

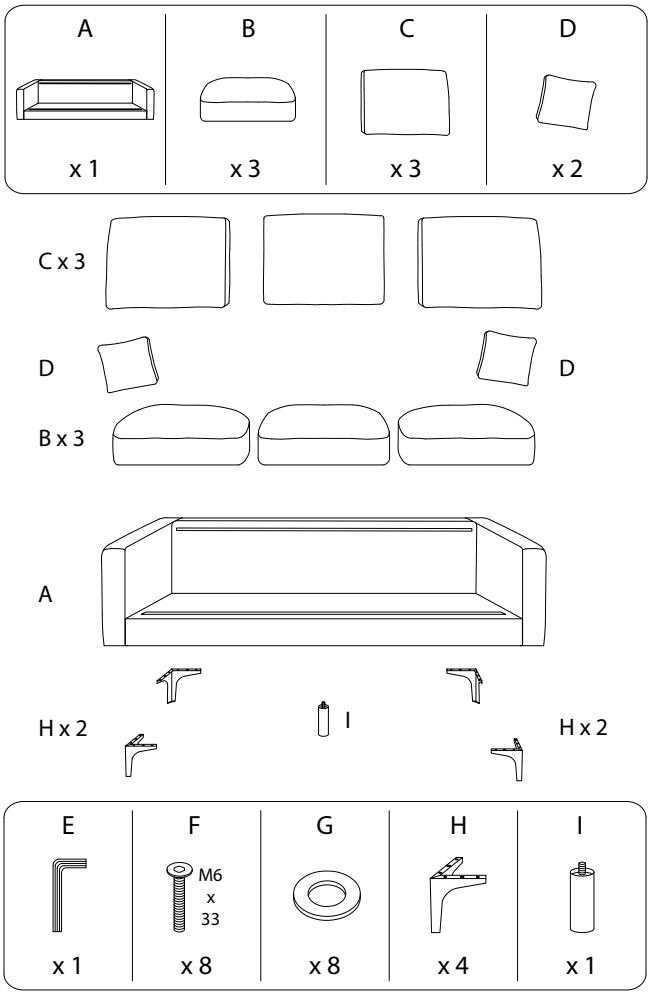
A
x 1
B
x 3
C
x 3
D
x 2
C x 3
D
D
B x 3
A
H x 2
I
H x 2
E
x 1
F
M6
x
33
x 8
G
x 8
H
x 4
I
x 1

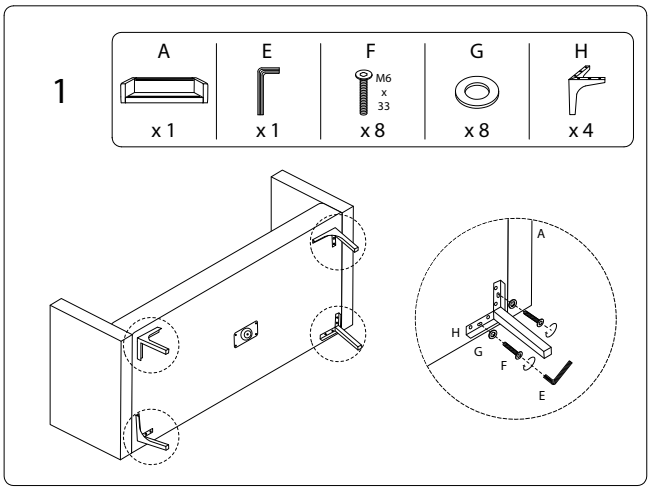
1
A
x 1
E
x 1
F
M6
x
33
x 8
G
x 8
H
x 4
A
H
G
F
E

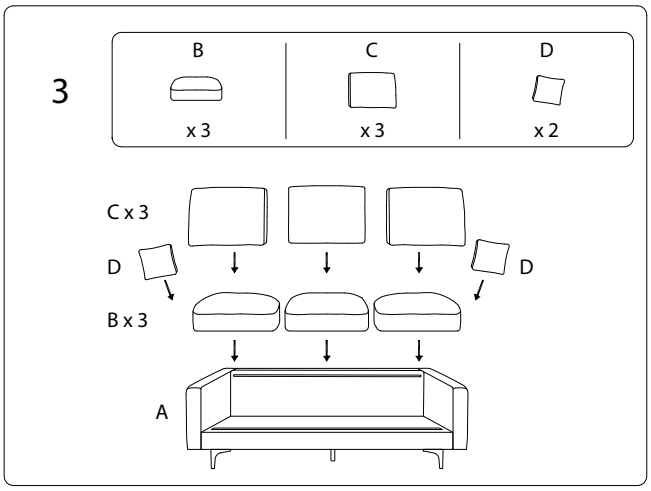
3
B
x 3
C
x 3
D
x 2
C x 3
D
D
B x 3
A

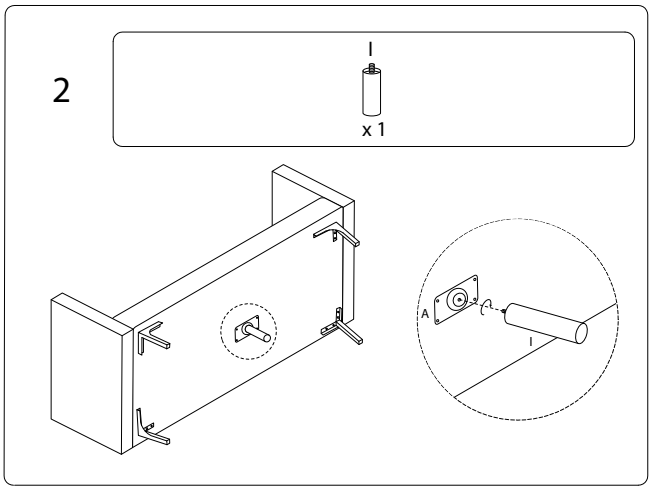
2
I
x 1
A
I