CONWAY

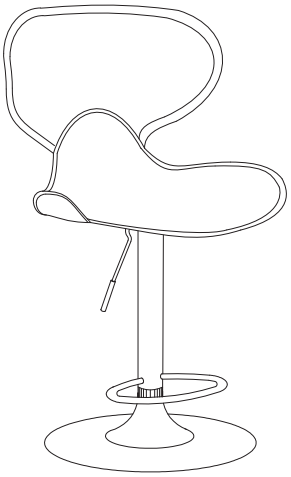

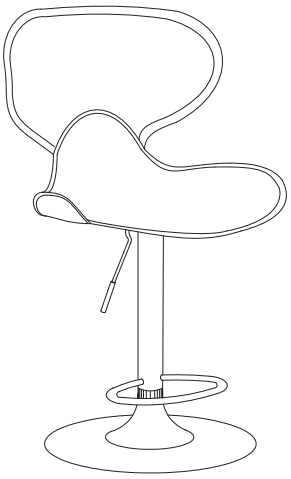

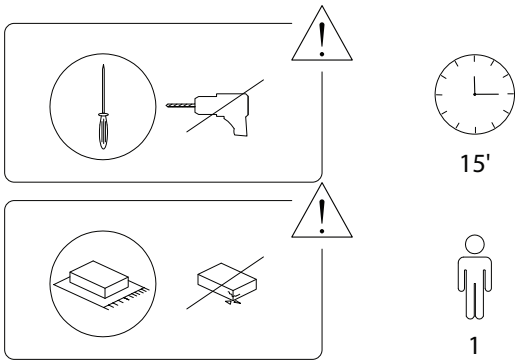

1/4

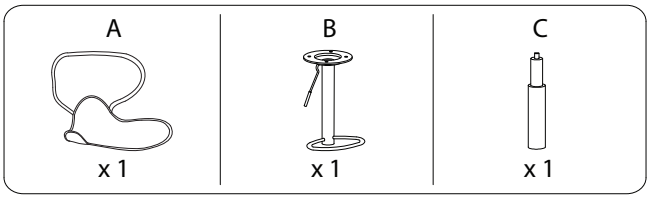

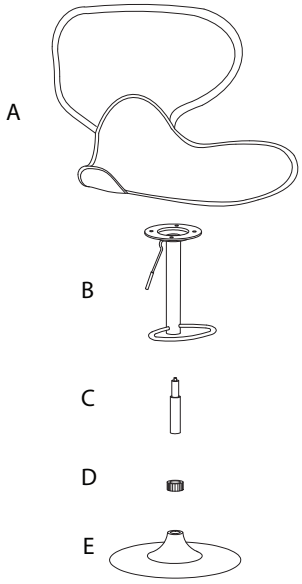

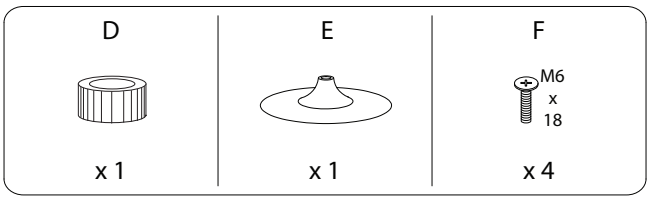

2/4

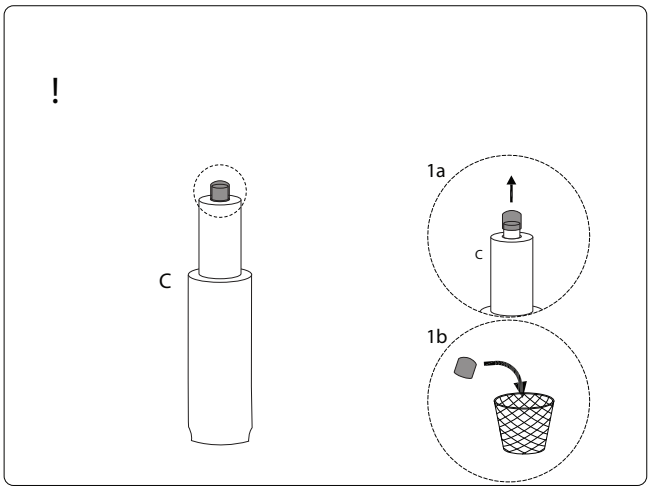

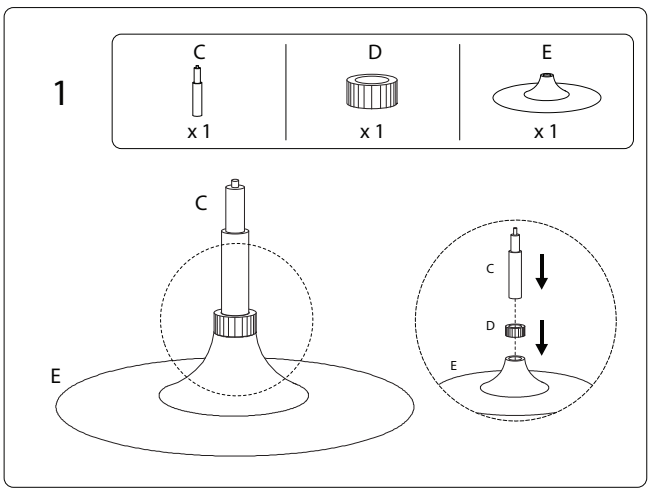

3/4

2

A	B	F
		 M6 x 18
x 1	x 1	x 4

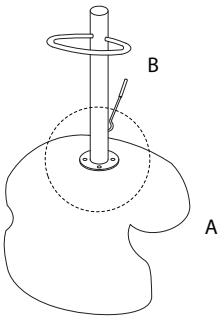

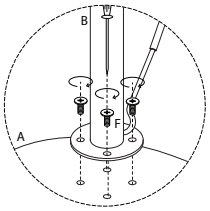

3

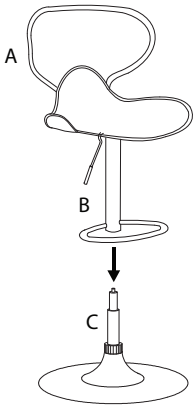

758/CONWAY/050424/