CARAQUET

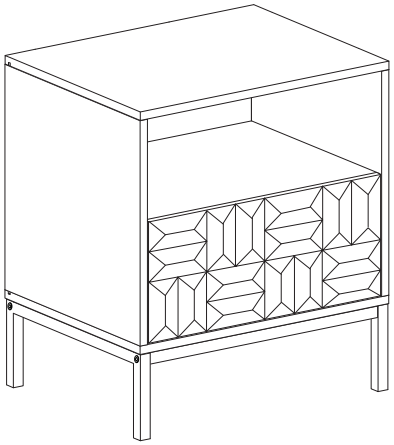

1/14

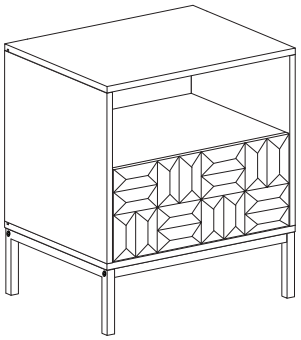

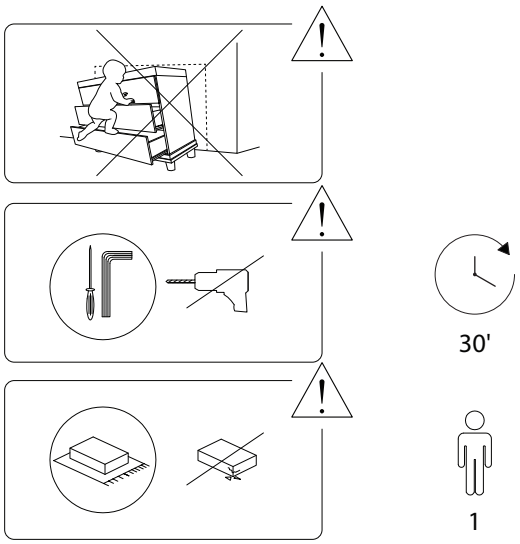

2/14

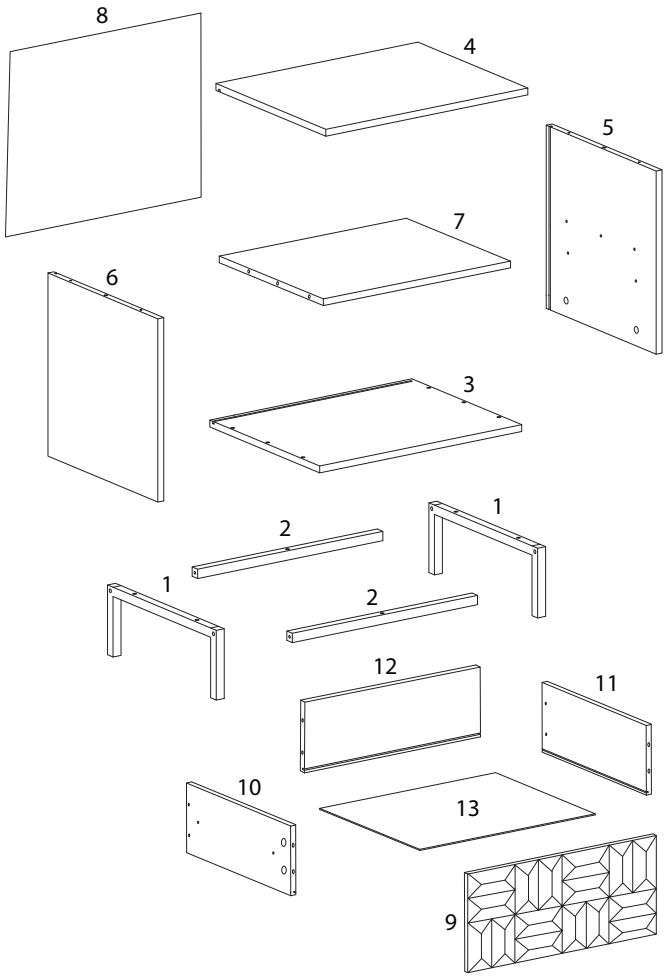

3/14

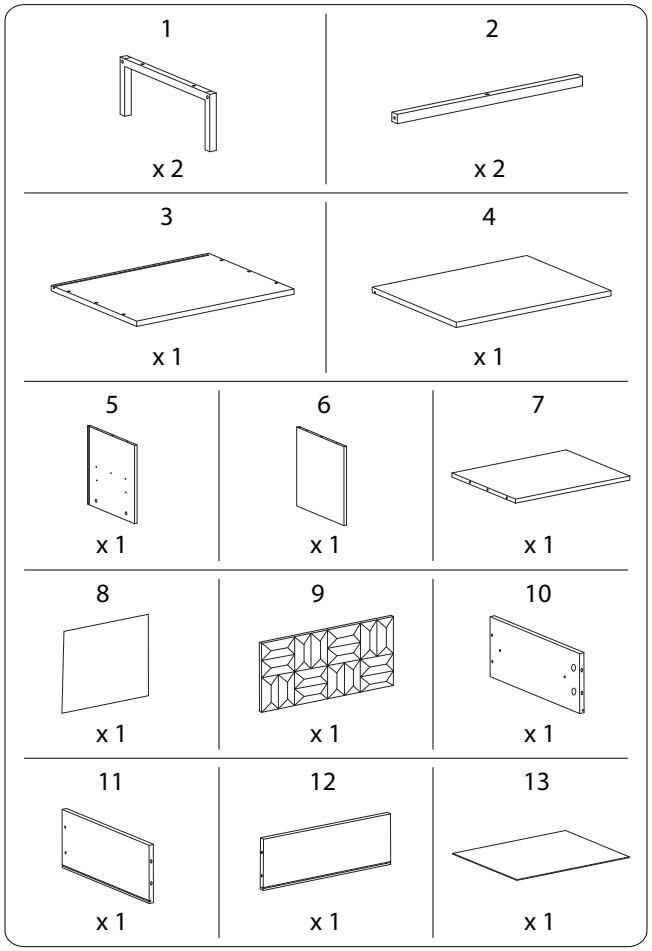

4/14

2667/CARAQUET/120126/

A	B	C
		
x 12	x 12	x 6
D	**E**	**F**
 M7 x 40	 M3.5 x 14	 M4 x 38
x 4	x 10	x 4

G	H	J	K
 M6 x 35	 M6 x 30	 M4	
x 4	x 6	x 1	x 8
L	**M**	**N1**	**N2**
	 M3 x 12	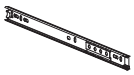	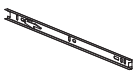
x 4	x 4	x 2	x 2
P1	**P2**	**P3**	**Q**
	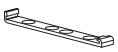		 M3 x 10
x 1	x 1	x 1	x 1

2667/CARAQUET/120126/

1

3	4	5	6	9	A	C
x 1	x 1	x 1	x 1	x 1	x 12	x 6

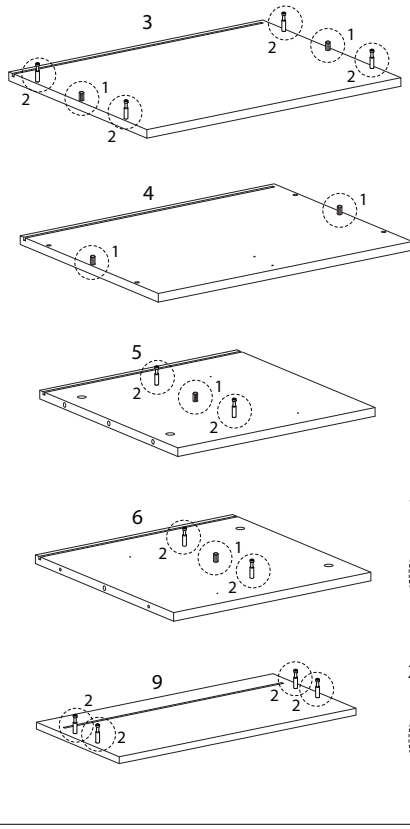

2667/CARAQUET/120126/

2

E	P1	P2
 M3.5 x 14		
x 2	x 1	x 1

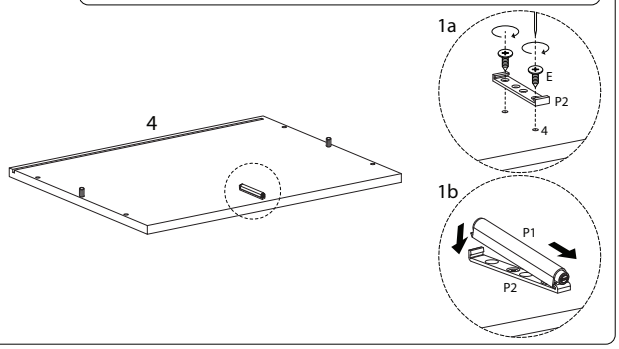

3

N1	E
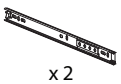	 M3.5 x 14
x 2	x 4

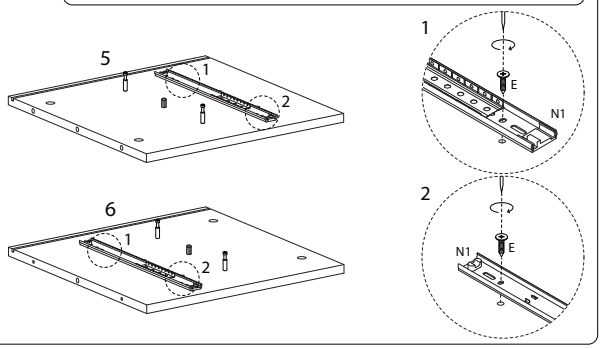

!

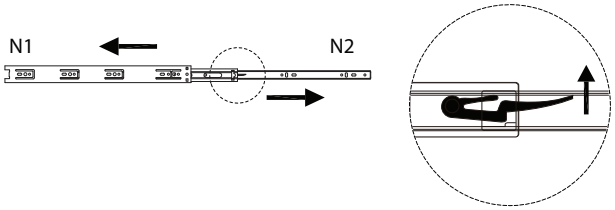

2667/CARAQUET/120126/

4

7	B
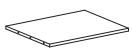	
x 1	x 4

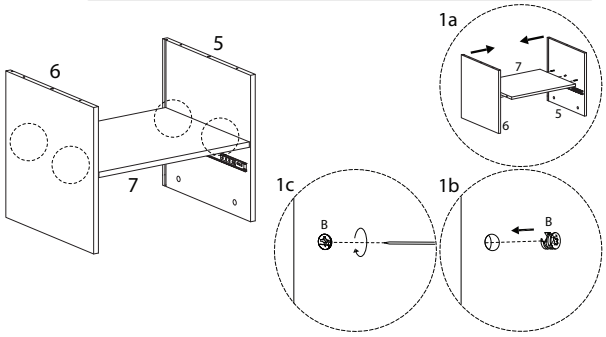

2667/CARAQUET/120126/

5

B

x 4

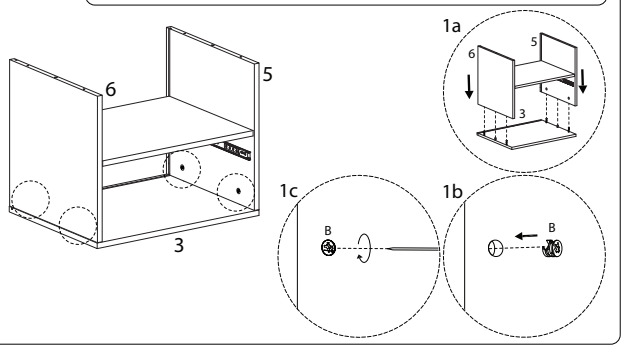

6

8

x 1

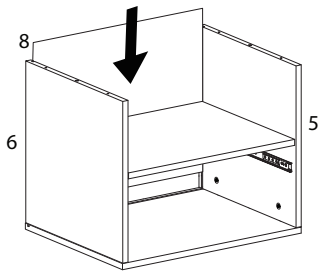

7

D

M7 x 40

x 4

J

M4

x 1

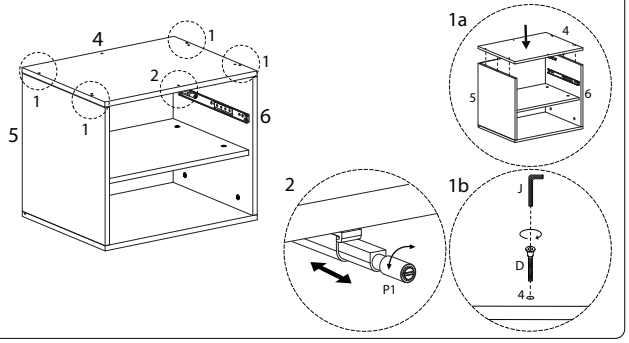

8

1

x 2

2

x 2

G

M6 x 35

x 4

J

M4

x 1

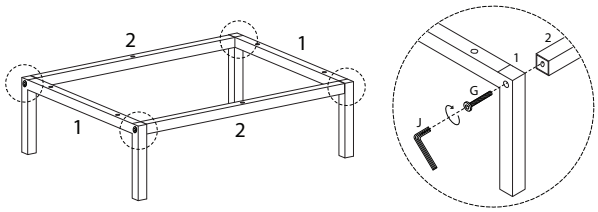

9

H

M6 x 30

x 6

J

M4

x 1

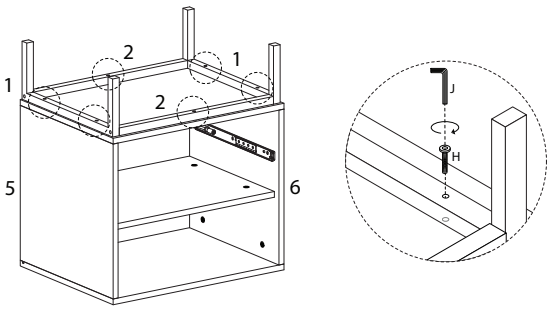

11

B

x 4

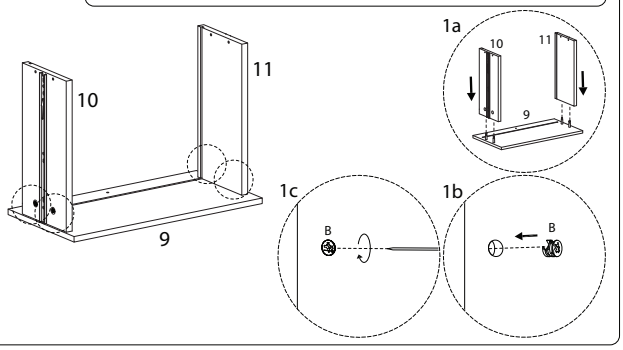

10

10

x 1

11

x 1

E

M3.5 x 14

x 4

N2

x 2

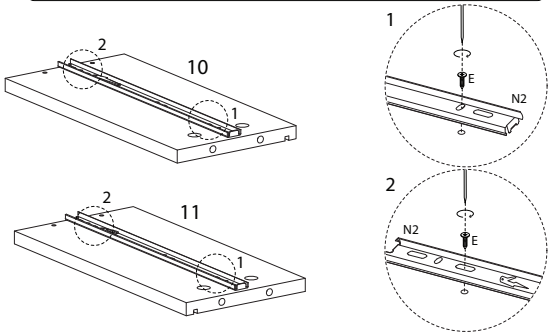

12

P3

x 1

Q

M3 x 10

x 1

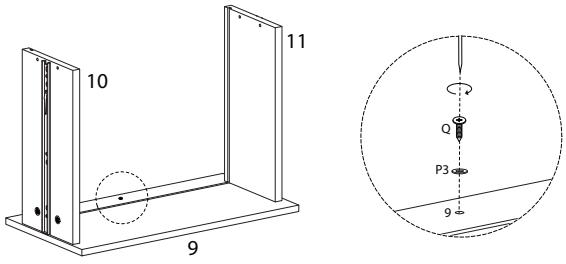

13

13

x 1

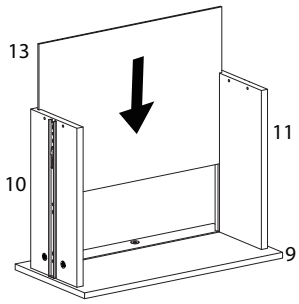

14

12

x 1

F

M4 x 38

x 4

K

x 4

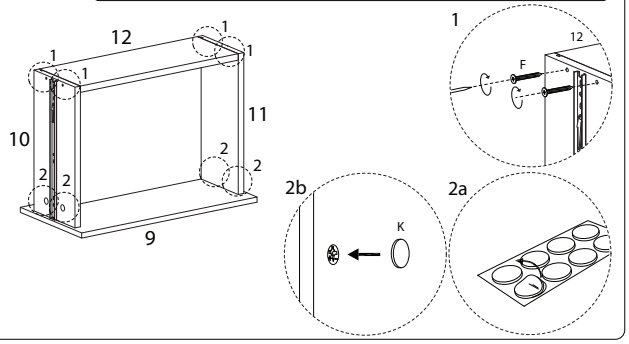

15

L

x 4

M

M3 x 12

x 4

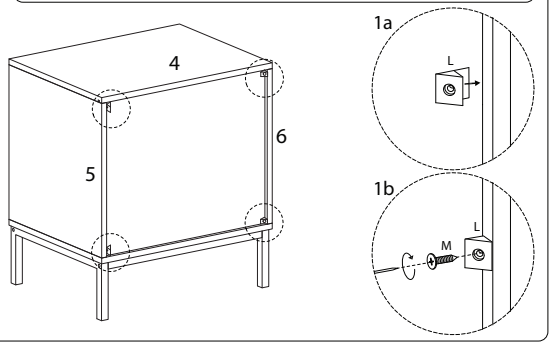

16

K

x 4

