WALPOLE

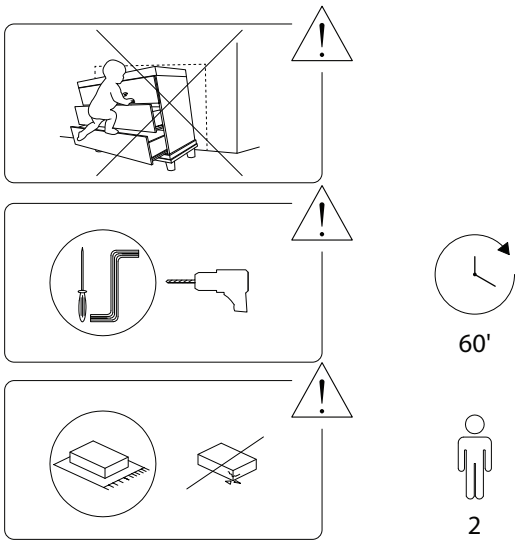
60'
2

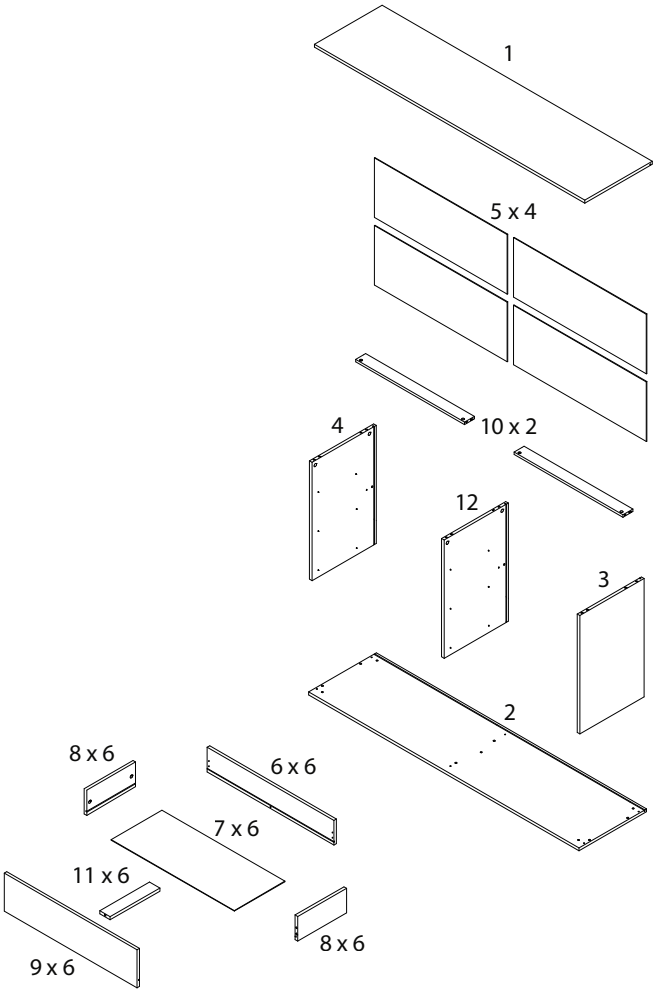
1
5 x 4
10 x 2
4
12
3
2
8 x 6
6 x 6
7 x 6
11 x 6
8 x 6
9 x 6

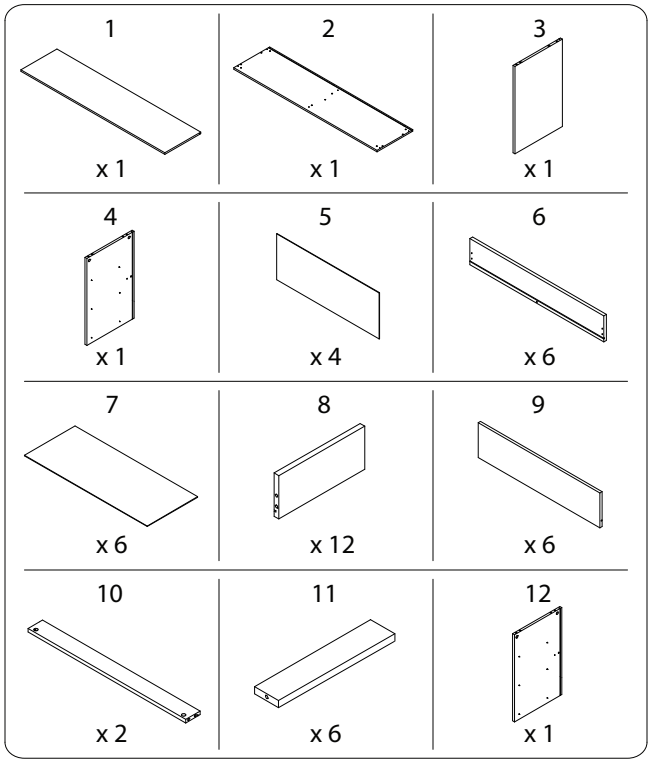
1
x 1
2
x 1
3
x 1
4
x 1
5
x 4
6
x 6
7
x 6
8
x 12
9
x 6
10
x 2
11
x 6
12
x 1

AT x 38	AU x 1	AZ x 1	B x 38	C x 40
CA M3 x 16 x 12	CT M3,5 x 14 x 10	CR1 x 6	CR2 x 6	CR3 x 6
CR4 x 6	D M3.5 x 14 x 48	DZ M7 x 50 x 5	E M4 x 40 x 12	FL x 1
P M6 x 8 x 12	PE x 5	PX x 6	U x 12	Z1 M4 x 13 x 1
Z2 M6 x 35 x 1	Z3 x 2	Z4 x 1	Z5 x 1	

1 x 6

6 x 1	9 x 1	B x 5

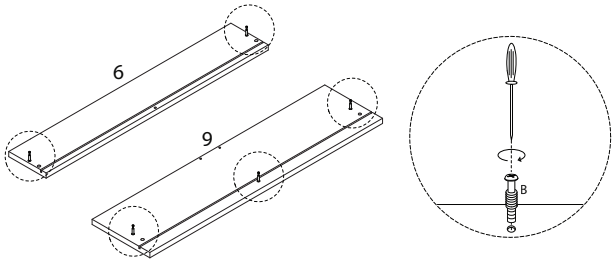

2 x 6

D M3.5 x 14 x 2	PX x 1

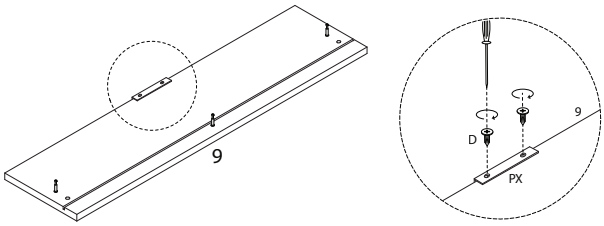

3 x 12

8 x 1	AT x 2

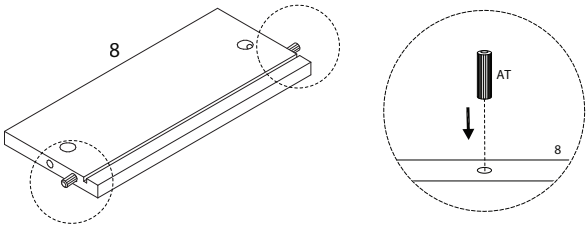

5 x 6

7 x 1

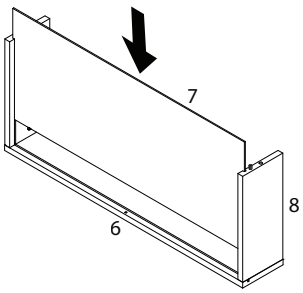

4 x 6

C x 2

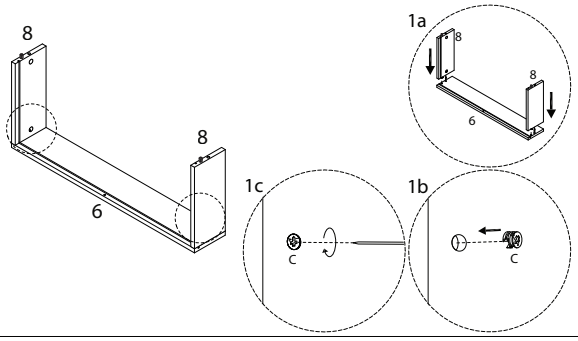

6 x 6

C x 2

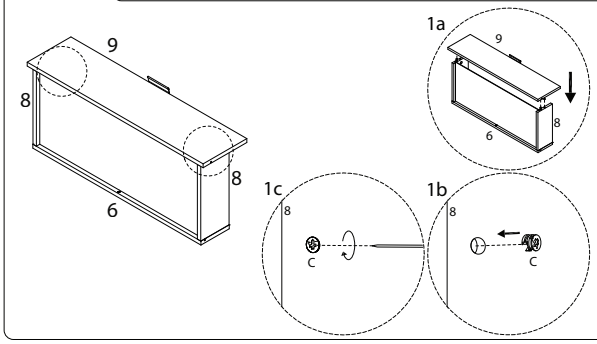

7 x 6

11	C	E
x 1	x 1	x 1

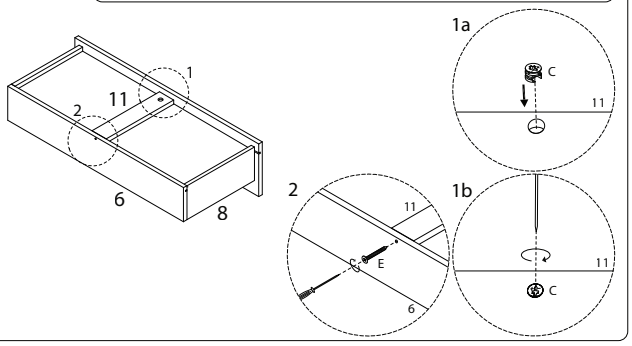

9

2	AZ	DZ	PE
x 1	x 1	x 5	x 5

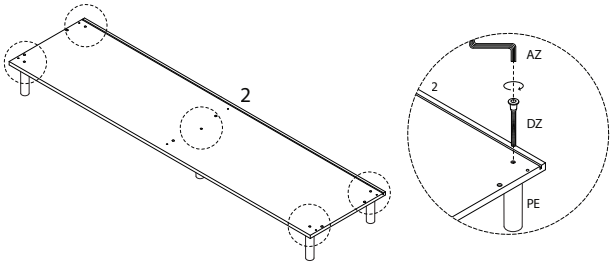

8 x 6

CR3	CR4	D
x 1	x 1	x 4

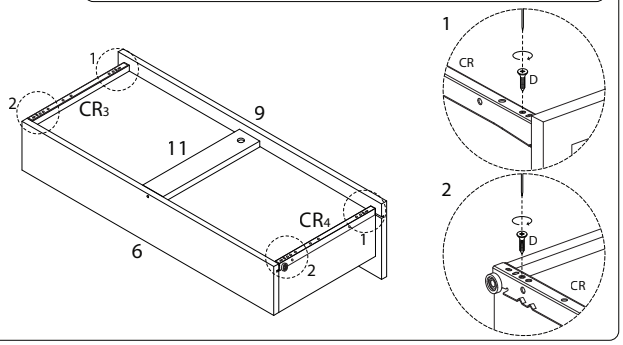

10

1	B
x 1	x 6

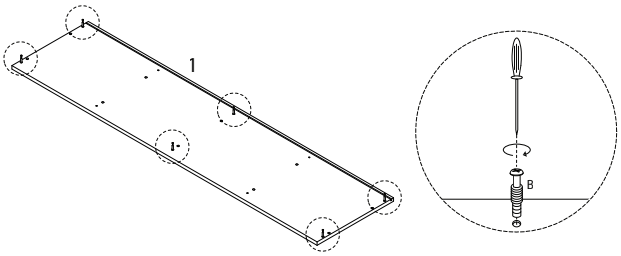

11

10	AT
x 2	x 2

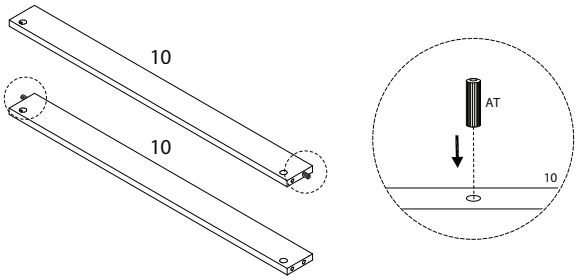

13

12	CR1	P
x 1	x 3	x 6

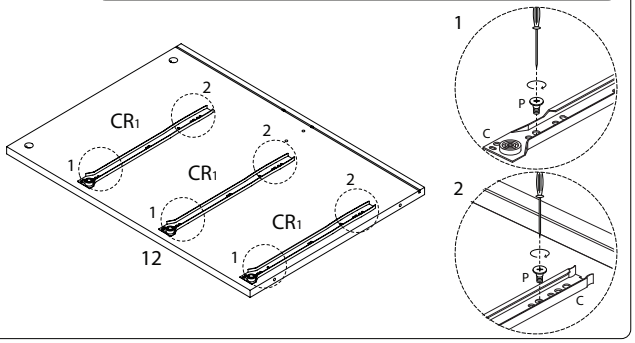

12

3	4	CR1	CR2	D
x 1	x 1	x 3	x 3	x 12

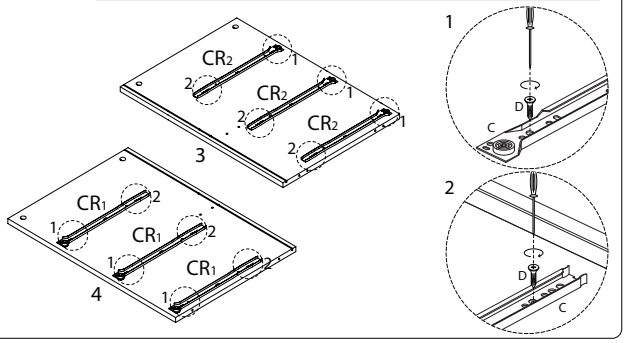

14

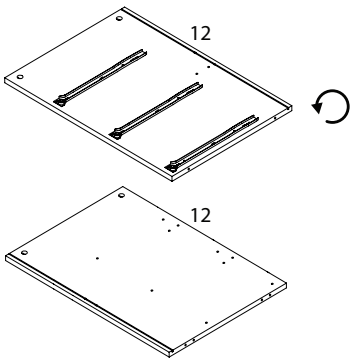

15

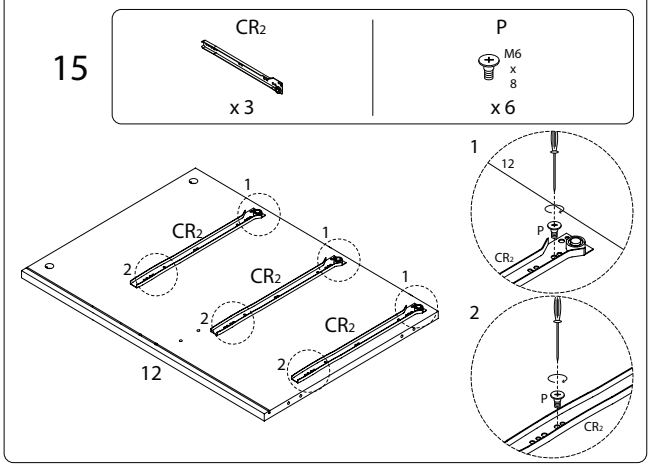

16

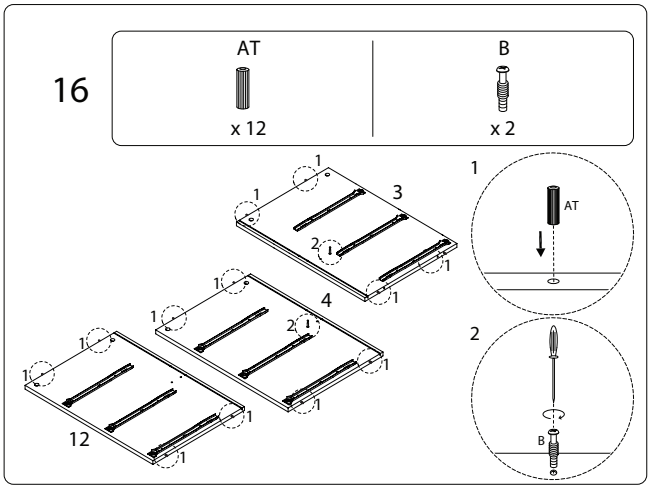

17

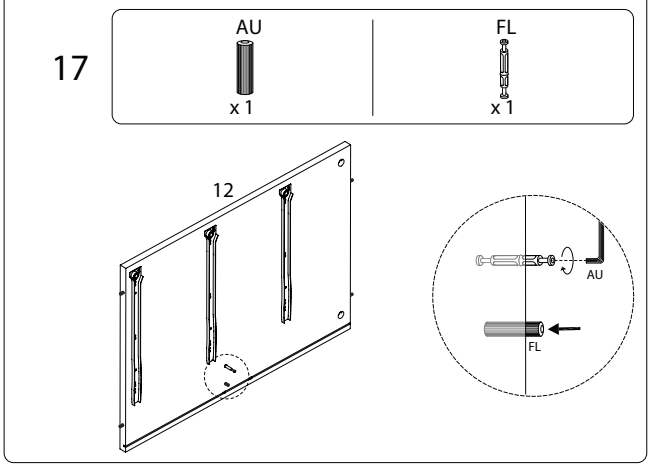

18

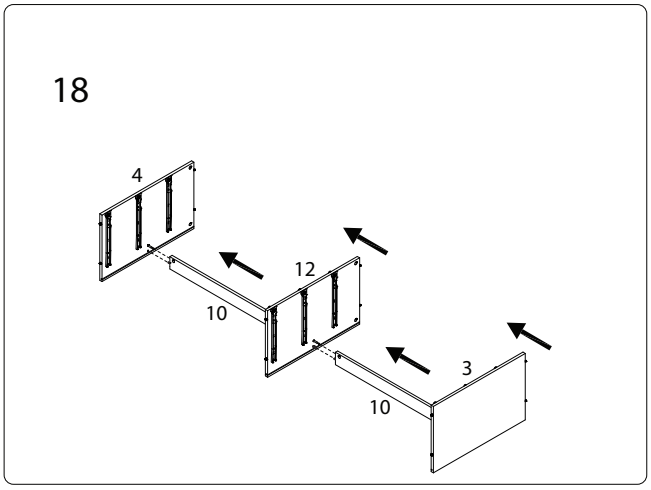

19

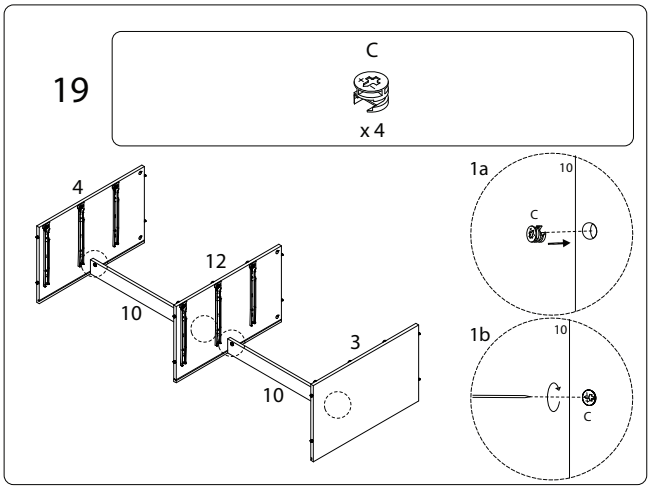

20

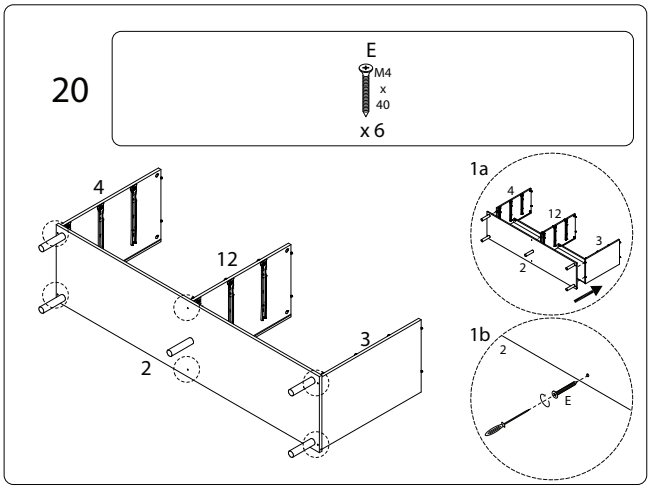

21

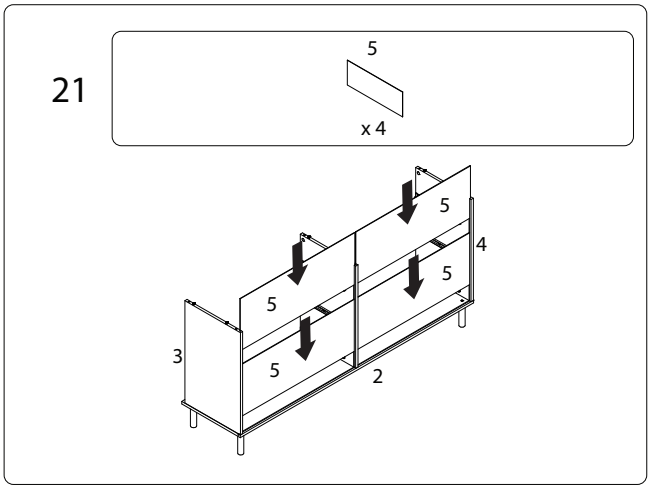

22

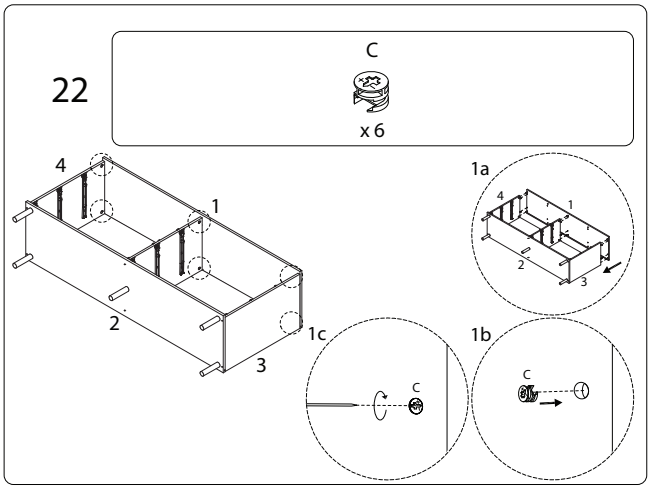

23

CA	CT	U
M3 x 16	M3,5 x 14	
x 12	x 10	x 12

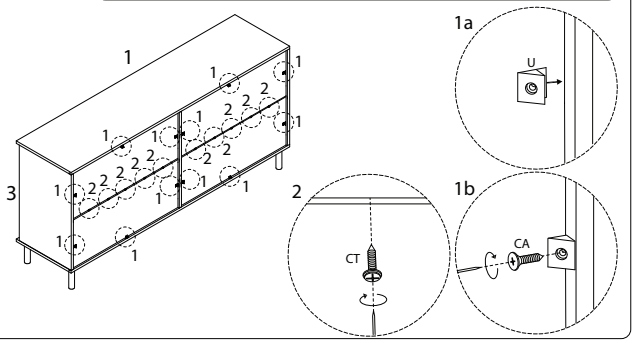

24

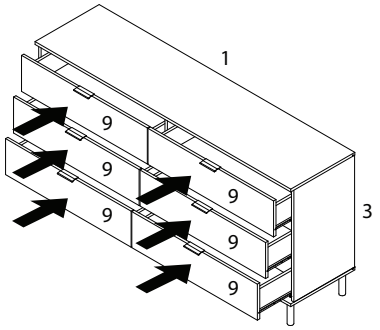

25
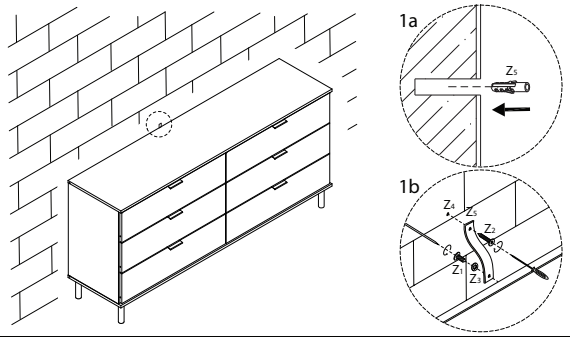
Z_1	Z_2	Z_3	Z_4	Z_5
M4 x 13	M6 x 35			
x 1	x 1	x 1	x 1	x 1