GLASTONBURY

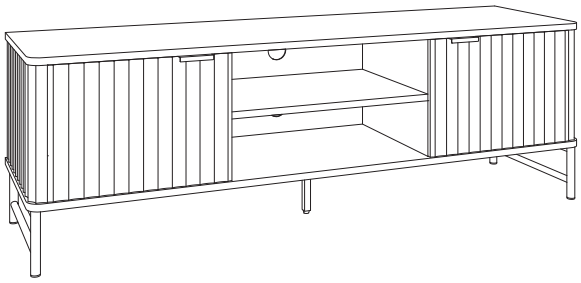

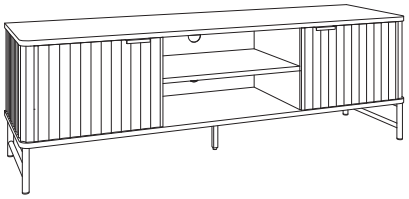

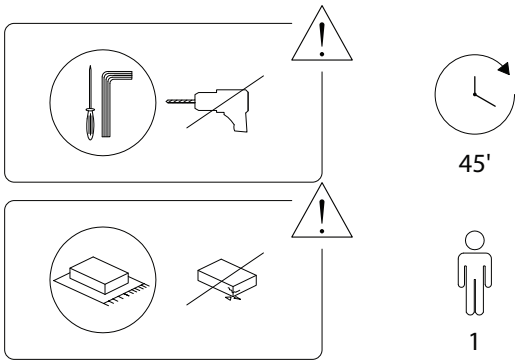

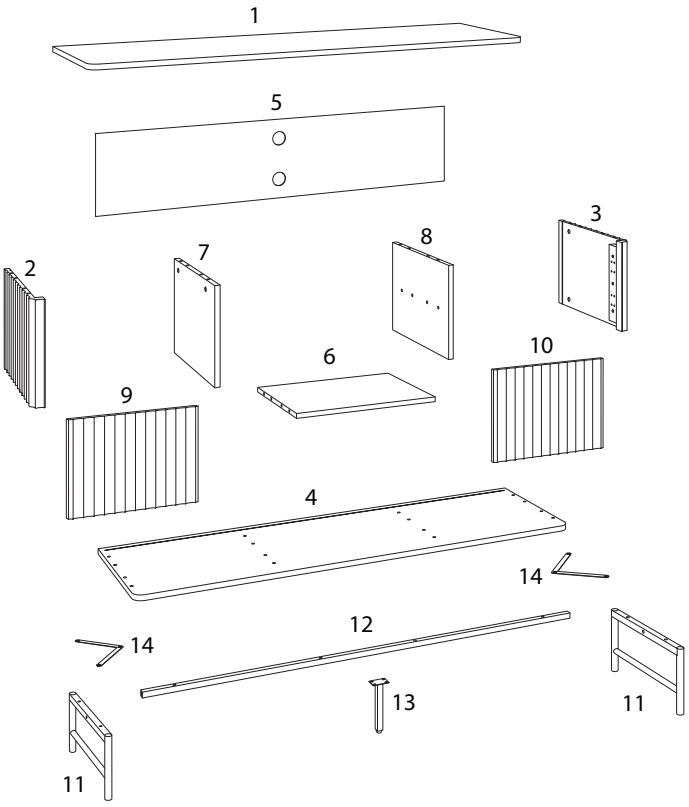

1 x 1	2 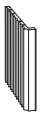 x 1	3 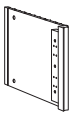 x 1
4 x 1	5 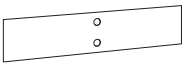 x 1	6 x 1
7 x 1	8 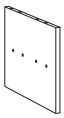 x 1	9 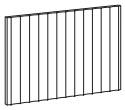 x 1
10 x 1	11 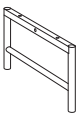 x 2	12 x 1
13 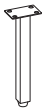 x 1	14 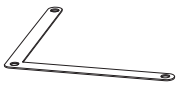 x 2	A 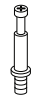 x 12

B	C	D	E_1
x 12	x 20	M4 x 40 x 8	x 2
E_2	E_3	E_4	E_5
x 2	x 4	M4 x 40 x 2	M3 x 16 x 2
F	G	H	I
x 4	x 2	M4 x 10 x 4	x 1
J	K	L	M
M6 x 40 x 2	x 10	M3 x 16 x 10	M5 x 35 x 8
N	O	P	Q
M4 x 14 x 24	M4 x 12 x 4	x 8	x 2

1

1	A
x 1	x 8

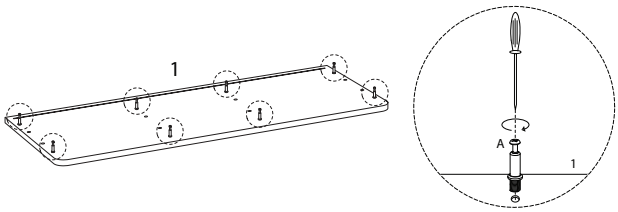

2

A	7	8
x 4	x 1	x 1

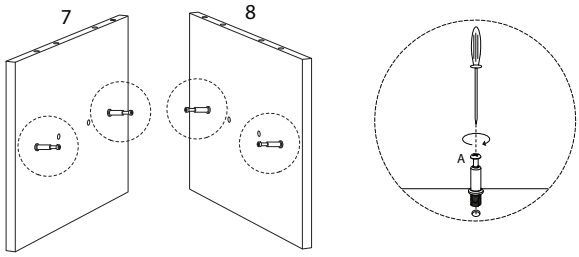

3

6	C
x 1	x 4

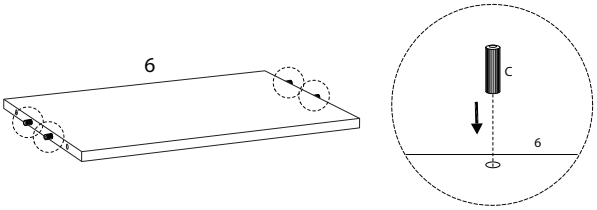

4

B
x 4

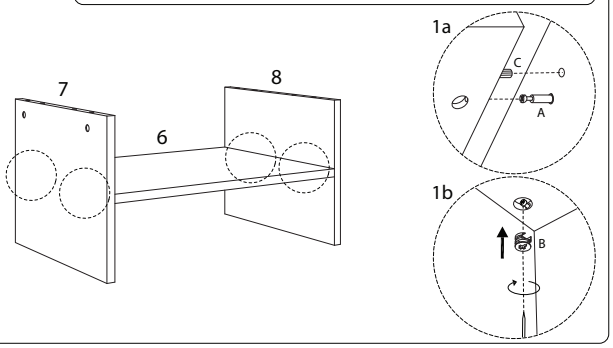

5

C
x 8

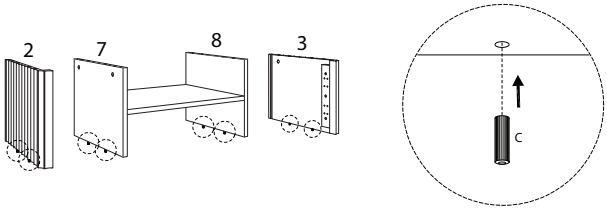

6

4	D
x 1	M4 x 40 x 8

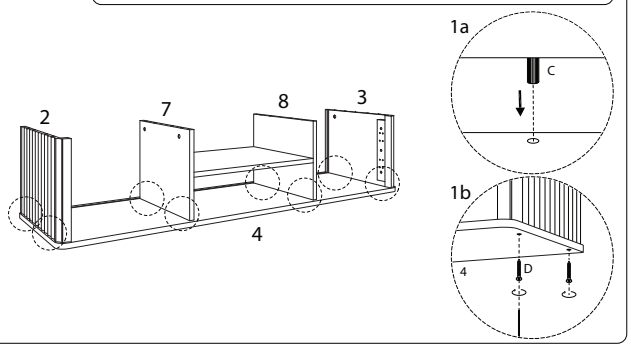

7

5

x 1

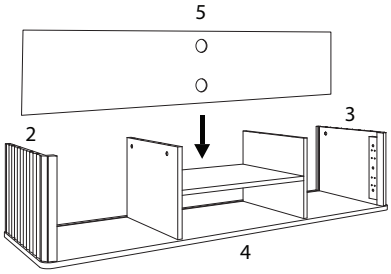

8

C

x 8

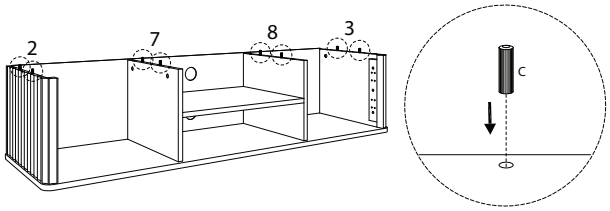

9

B

x 4

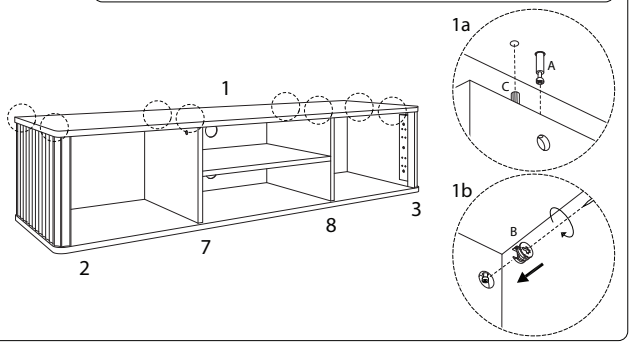

10

P

x 8

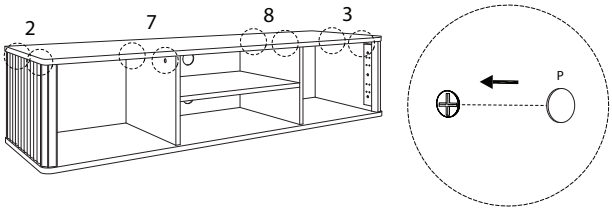

11

11	12	I	J
x 2	x 1	x 1	x 2

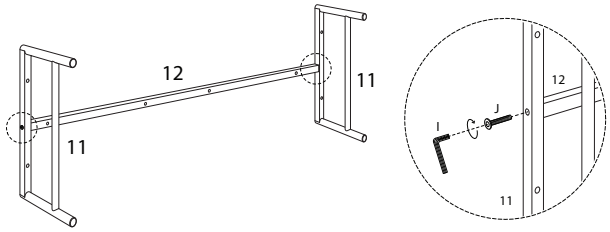

13

14	I	M
x 2	x 1	x 2

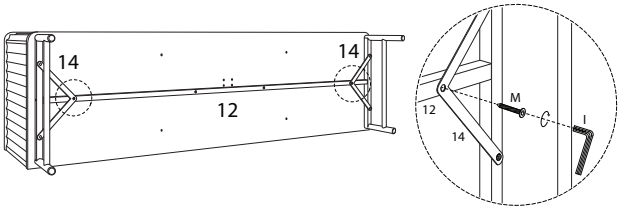

12

I	M	Q
x 1	x 2	x 2

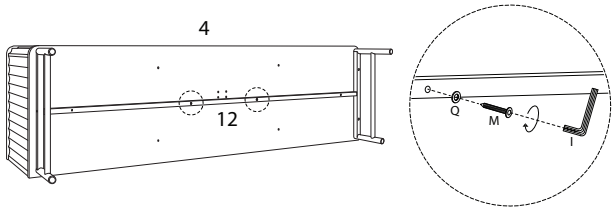

14

I	M
x 1	x 4

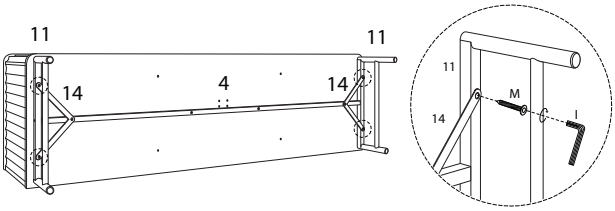

15

13	O
x 1	M4 x 12 x 4

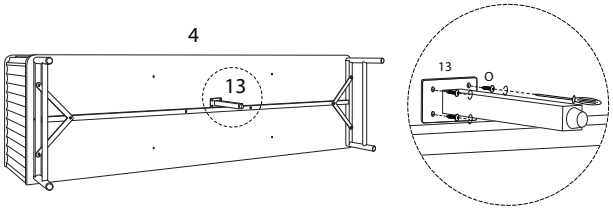

16

9	10	F	N
x 1	x 1	x 4	M4 x 14 x 8

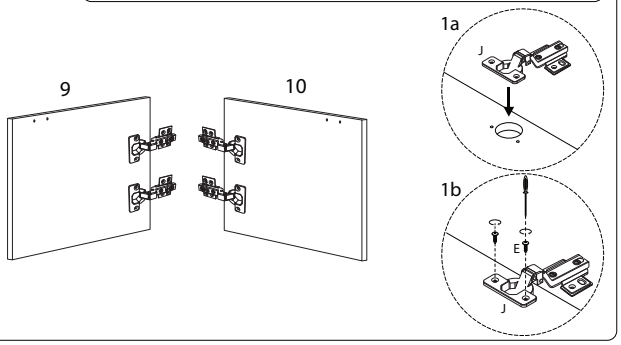

17

G	H
x 2	M4 x 10 x 4

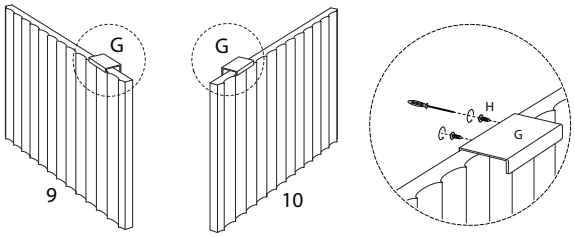

18

N
M4 x 14 x 16

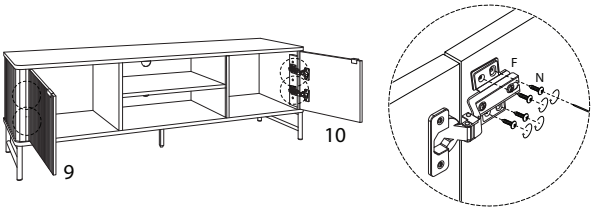

!

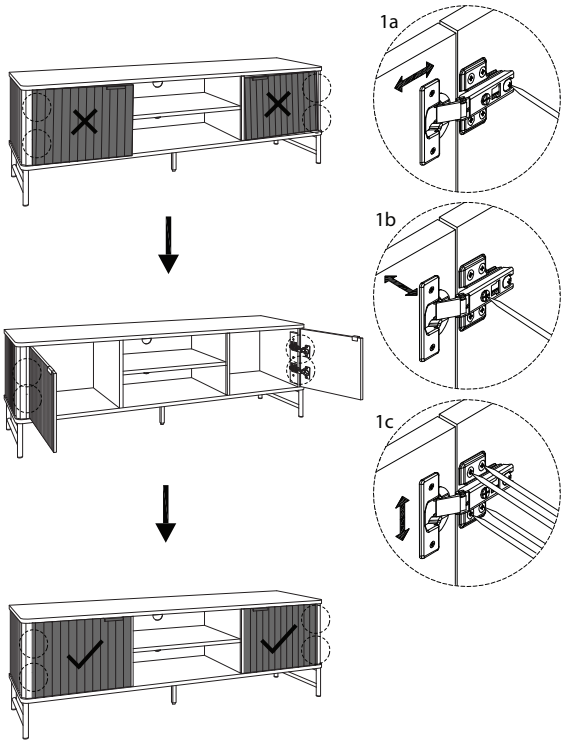

19

K	L
x 10	M3 x 16 x 10

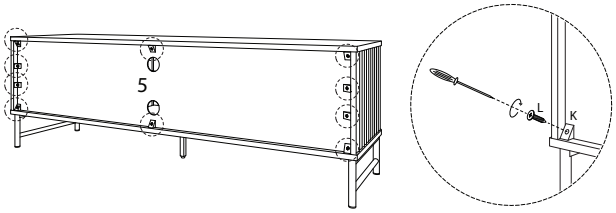

20

E_1	E_3	E_5
x 2	x 2	x 2

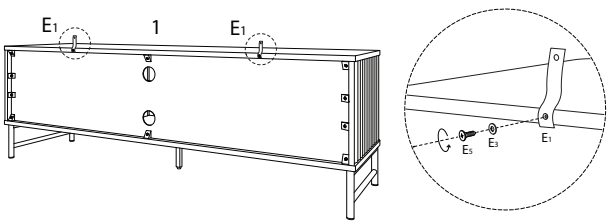

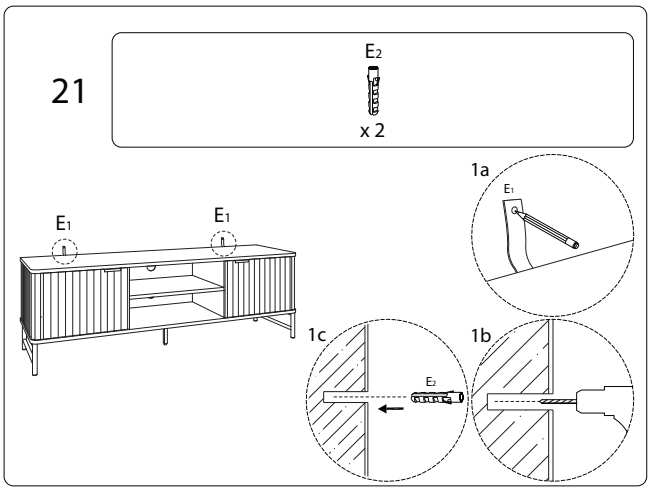

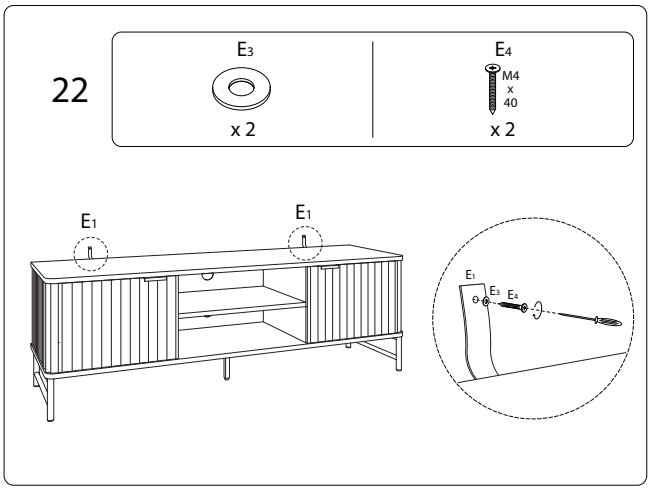

2285/GLASTONBURY/301025/