IGUAZU

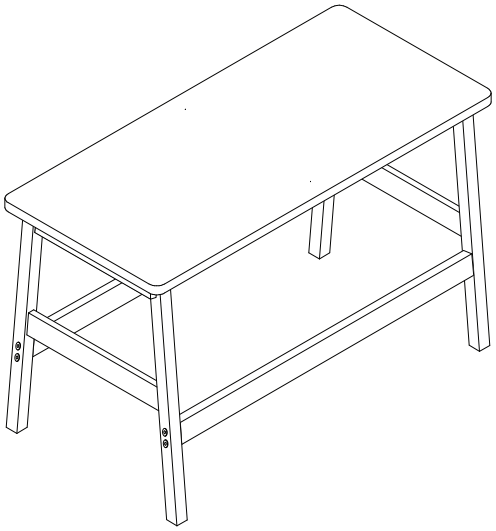

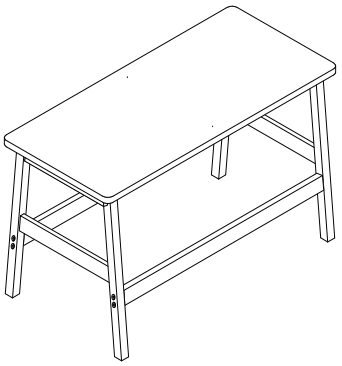

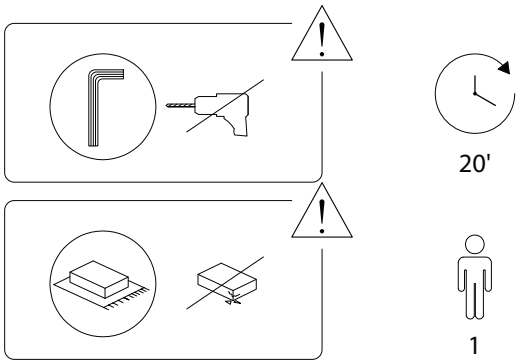

1/3

2213/IGUAZU/110425/

A	B	C	D
x 1	x 1	x 1	x 2

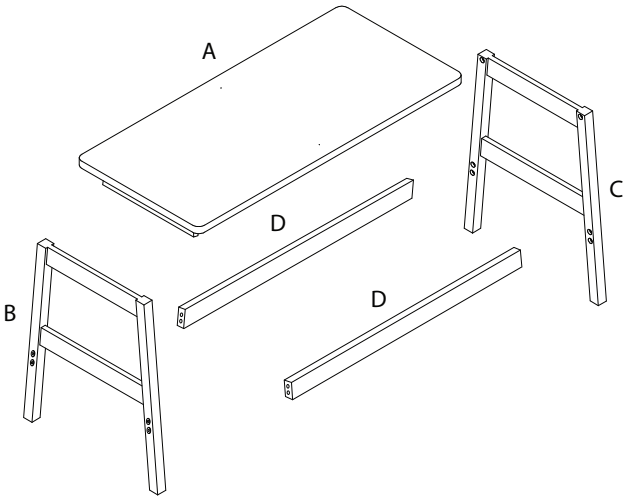

1	2
M5 x 50	
x 12	x 1

2/3

2213/IGUAZU/110425/

1

A	B	D	1	2
			M5 x 50	
x 1	x 1	x 2	x 6	x 1

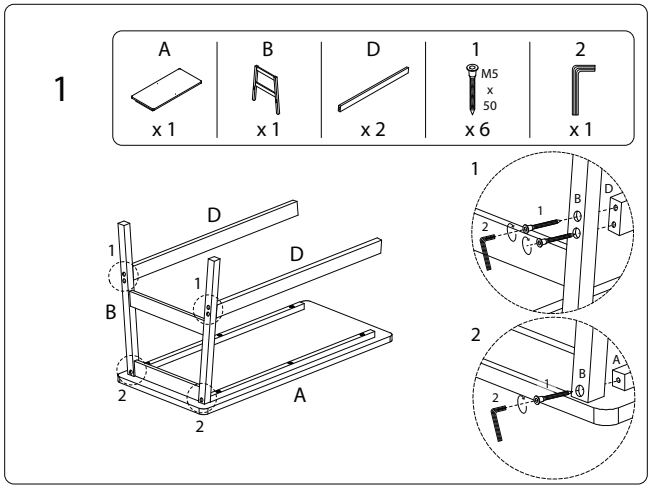

2

C	1	2
	M5 x 50	
x 1	x 6	x 1

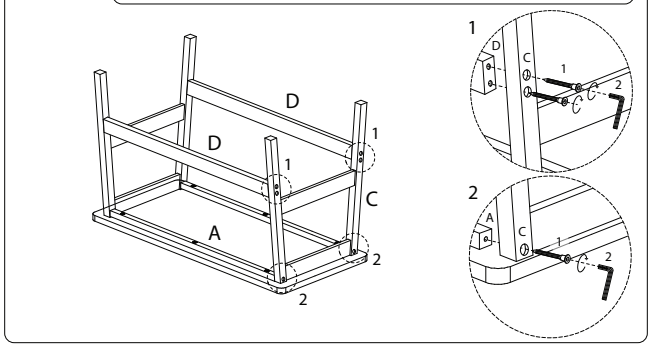

3/3

2213/IGUAZU/110425/