AMLI

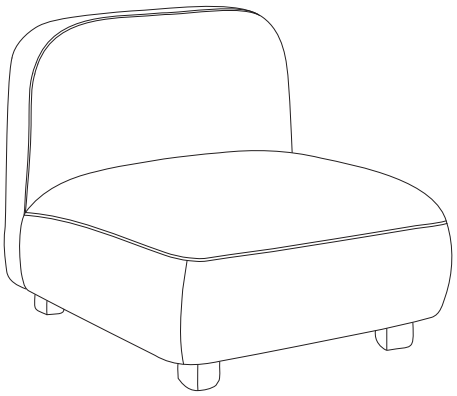

1/5

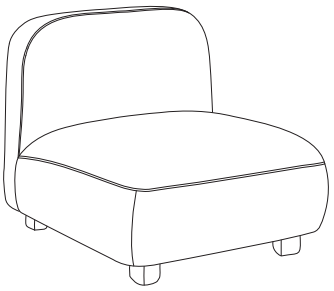

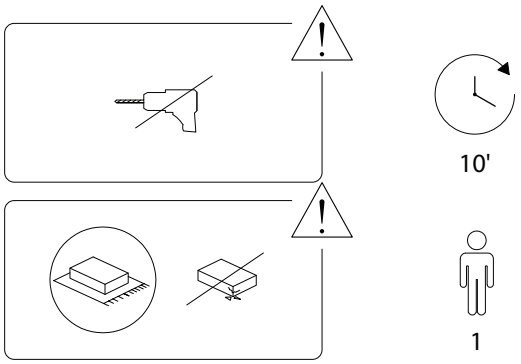

2/5

713/AMLI/120526

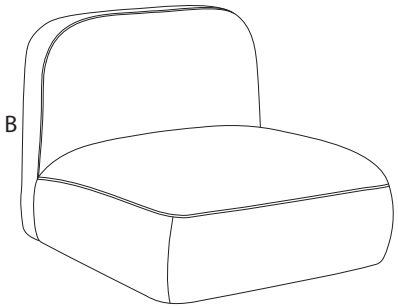

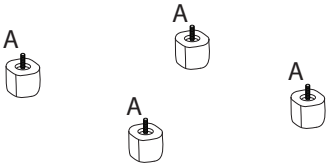

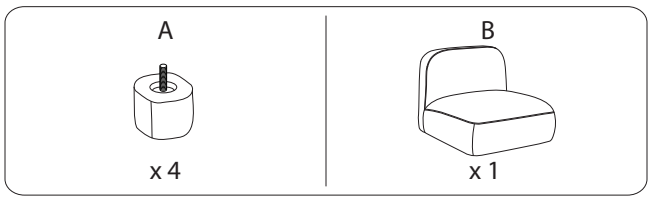

3/5

713/AMLI/120526

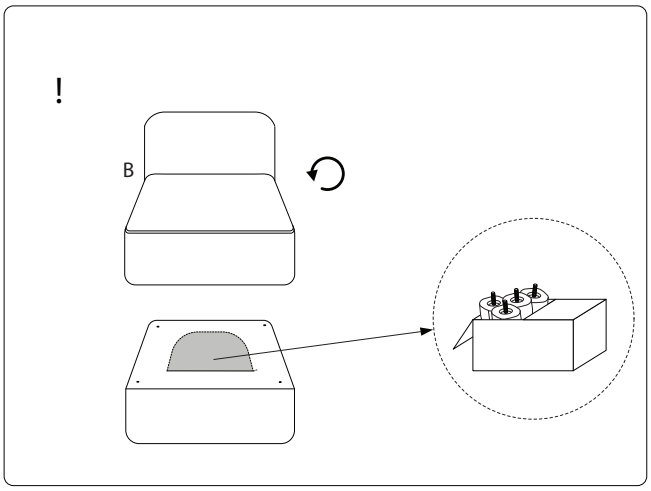

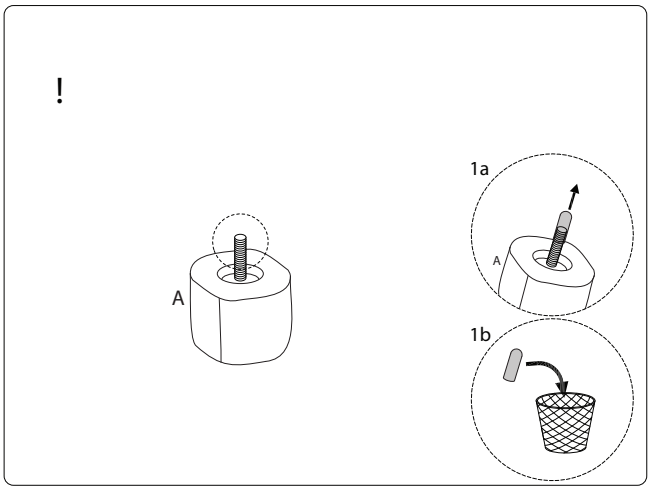

4/5

713/AMLI/120526

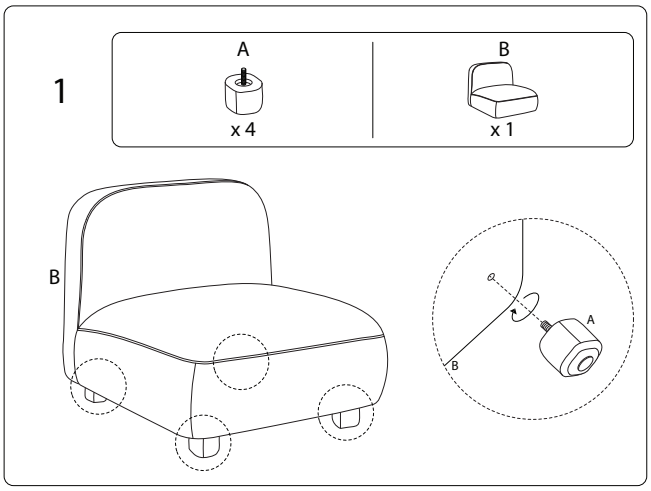

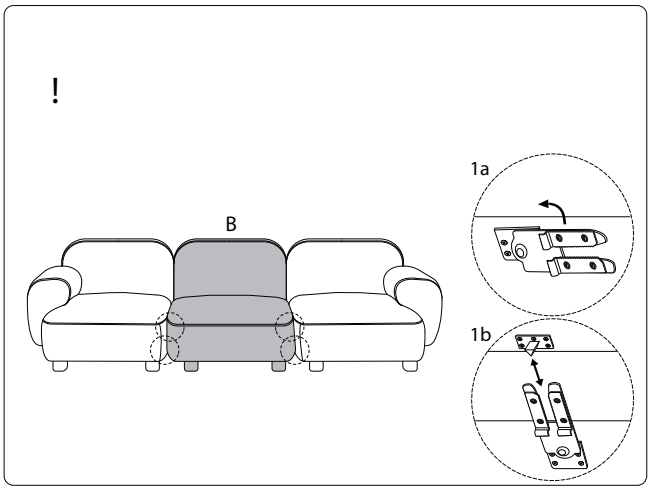

713/AMLI/120526