LUANA

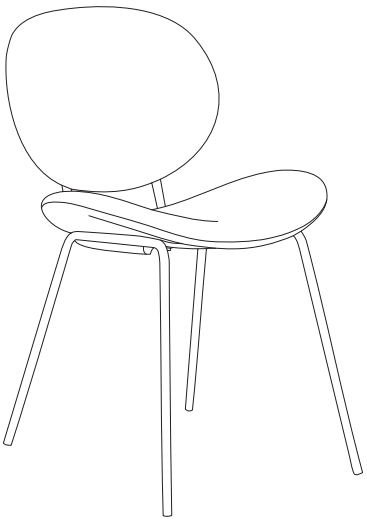



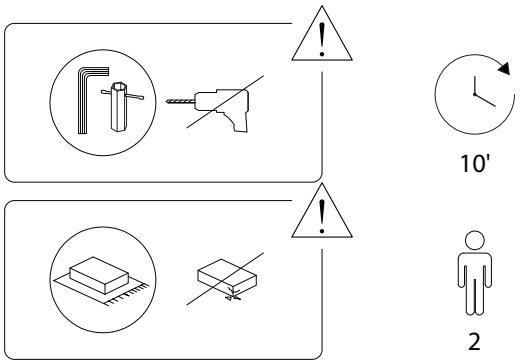

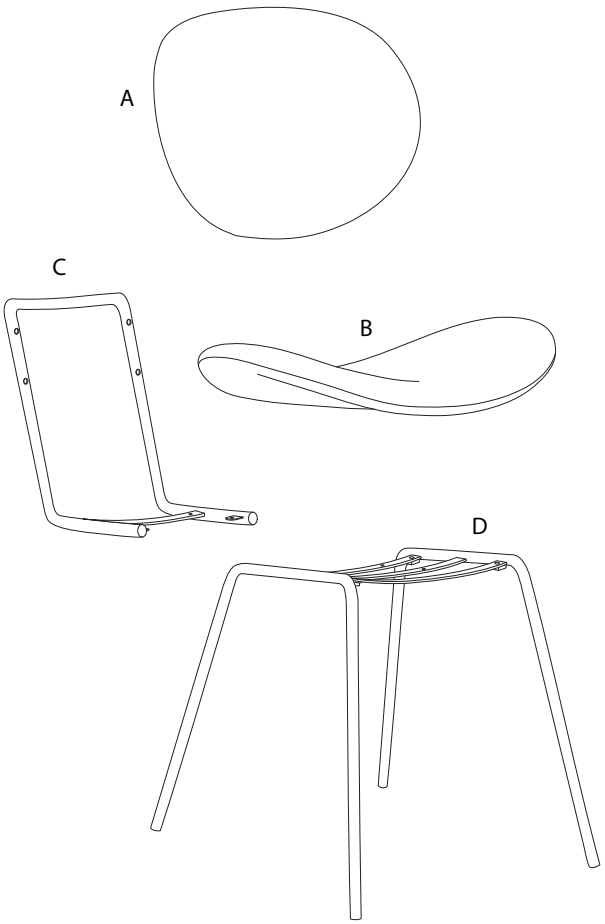

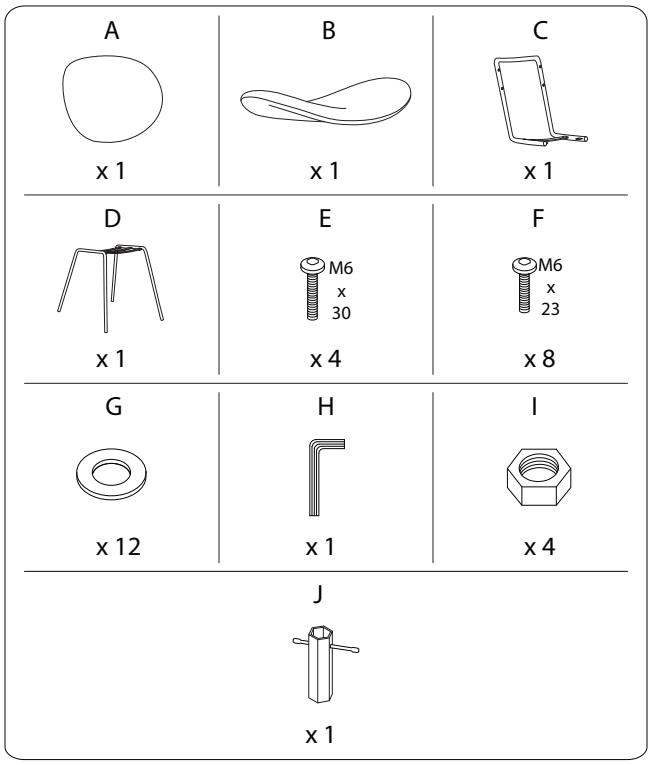

!

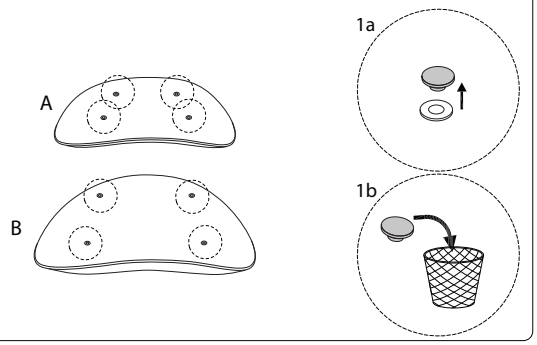
A
B
1a
1b

1

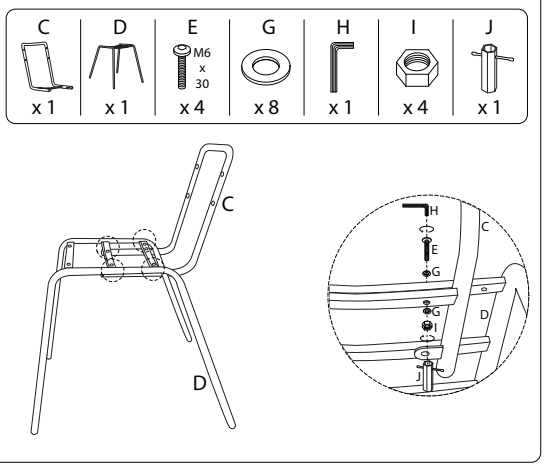
C
x 1
D
x 1
E
M6
x
30
x 4
G
x 8
H
x 1
I
x 4
J
x 1
C
D
H
E
G
G
I
J
C
D

2

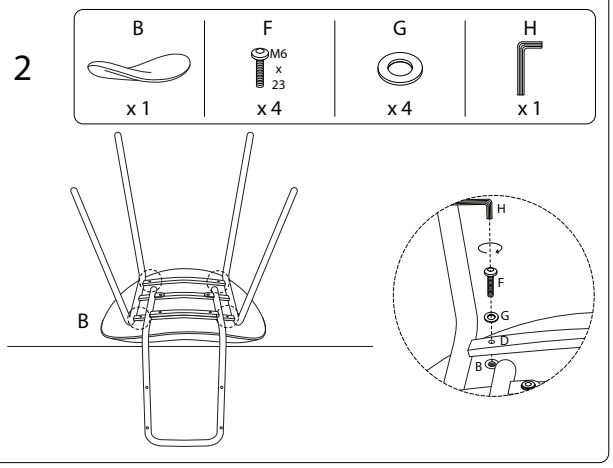
B
x 1
F
M6
x
23
x 4
G
x 4
H
x 1
B
H
F
G
D
B

3

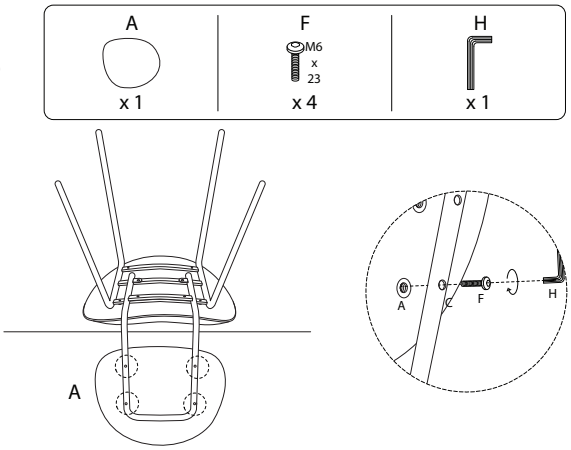
A
x 1
F
M6
x
23
x 4
H
x 1
A
A
C
F
H