MALASPINA

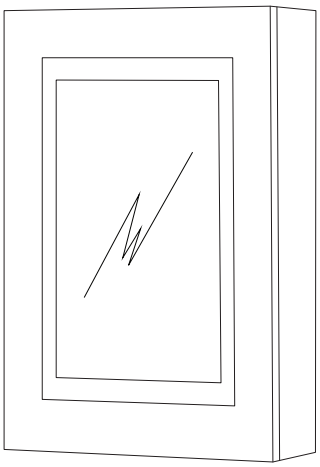

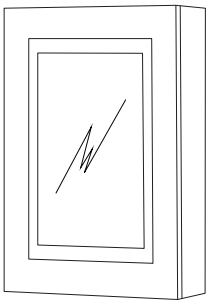

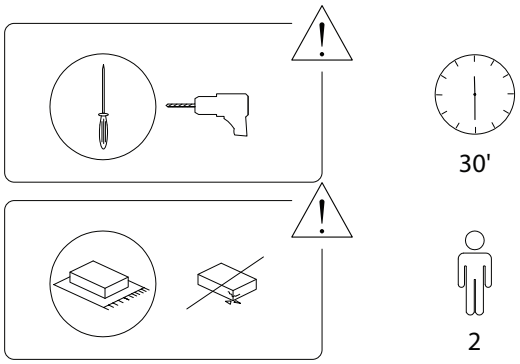

Beliani

1/4

Beliani

A

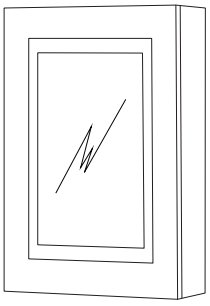

A	B	C	D	E
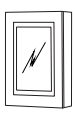			 M3 x 50	
x 1	x 4	x 4	x 4	x 4

2/4

Beliani

1

A	B	C	D	E
			 M3 x 50	
x 1	x 4	x 4	x 4	x 4

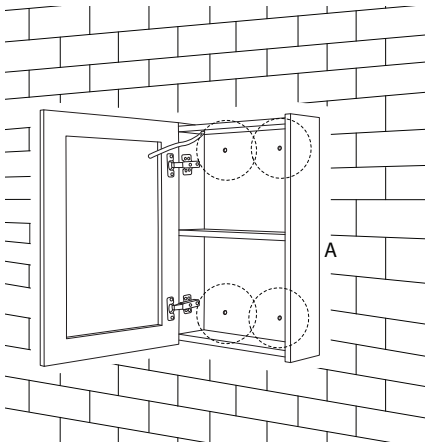

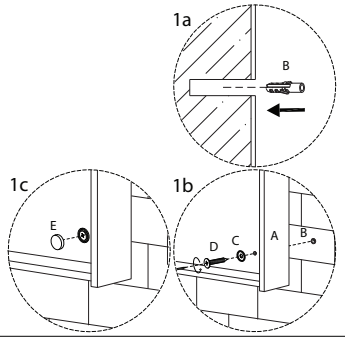

3/4

Beliani

2

