TIMBOON

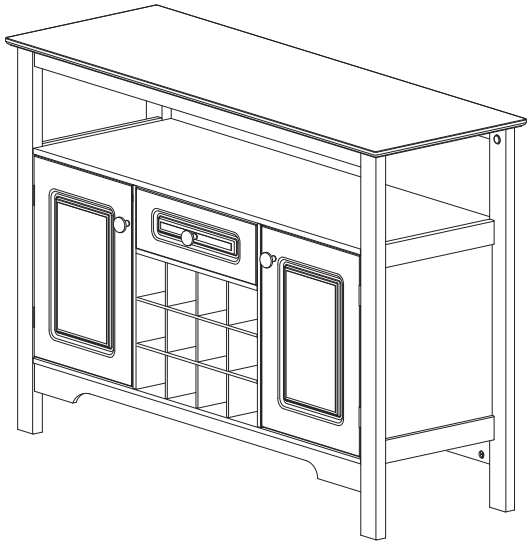

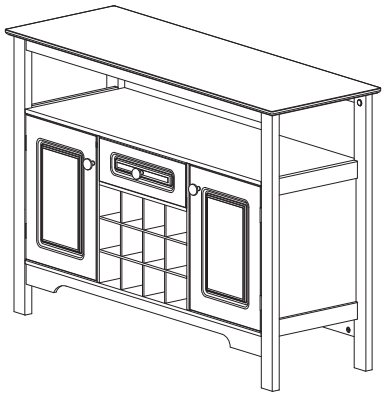

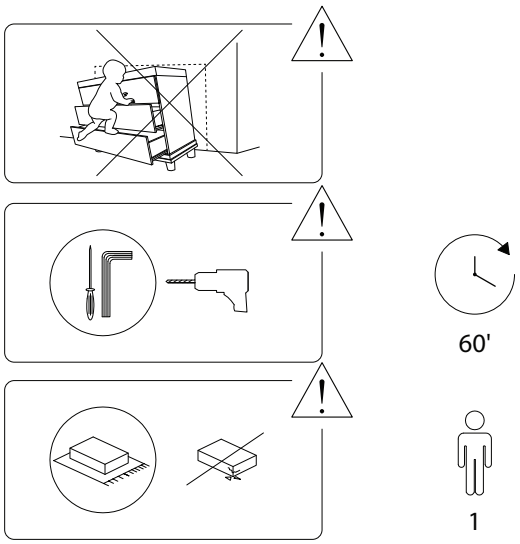
60'
1

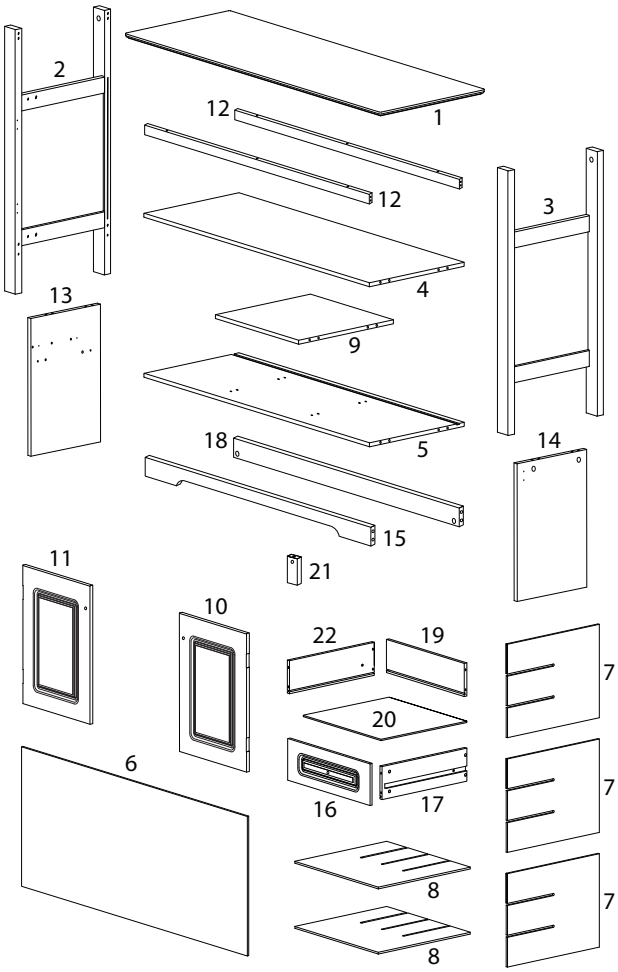
2
1
12
12
3
4
13
9
5
18
15
14
21
11
10
22
19
20
7
7
6
16
17
8
8
7

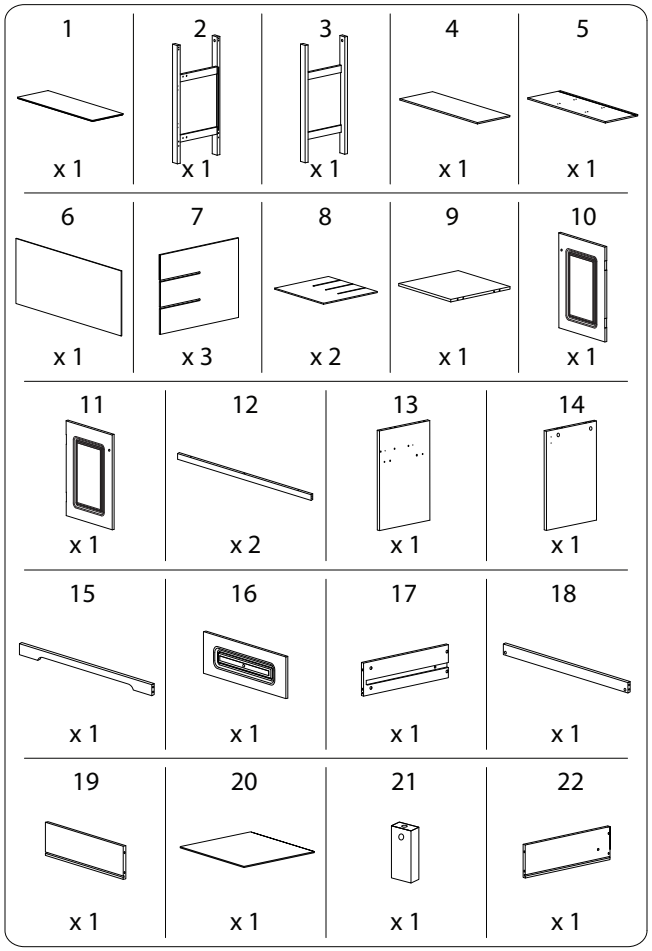
1
x 1
2
x 1
3
x 1
4
x 1
5
x 1
6
x 1
7
x 3
8
x 2
9
x 1
10
x 1
11
x 1
12
x 2
13
x 1
14
x 1
15
x 1
16
x 1
17
x 1
18
x 1
19
x 1
20
x 1
21
x 1
22
x 1

A	B	C	D
			
x 37	x 37	x 28	x 4
E	**F**	**G**	**H**
			
x 22	x 3	x 14	x 4
I	**J**	**K**	**L**
			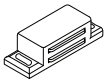
x 2	x 2	x 4	x 2
M	**N**	**O**	**P**
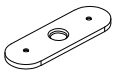			
x 2	x 3	x 2	x 1
Q	**R**	**S**	
			
x 1	x 1	x 1	

1

13	14	D	L
			
x 1	x 1	x 4	x 2

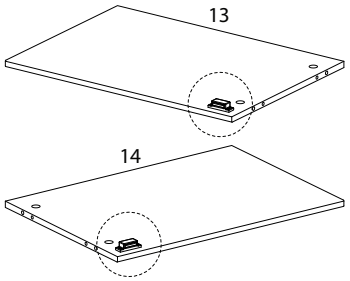

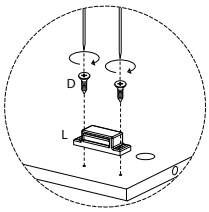

2

E	J
	
x 4	x 2

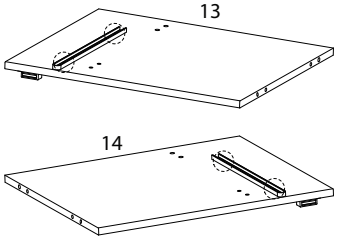

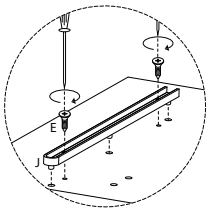

3

B

x 4

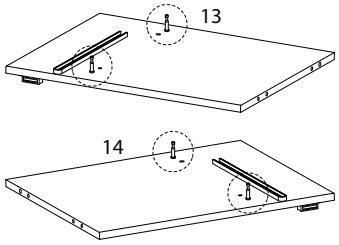

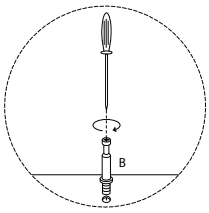

5

A

x 4

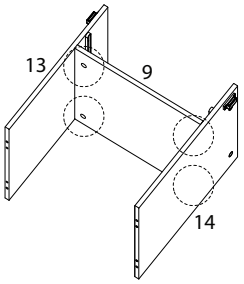

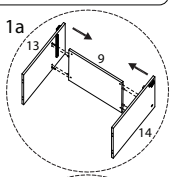

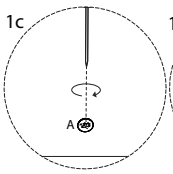

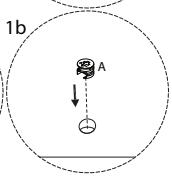

4

9	C
	
x 1	x 4

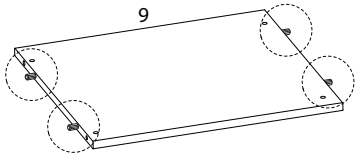

6

C
x 8

7

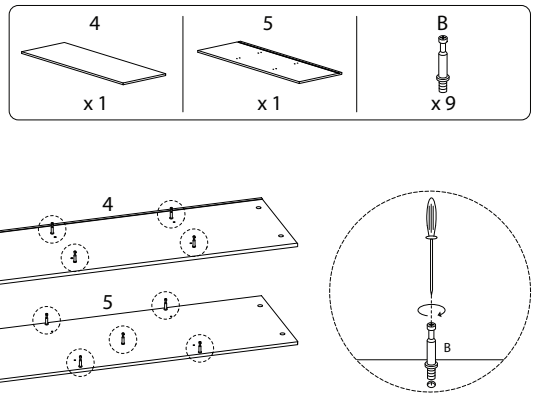

8

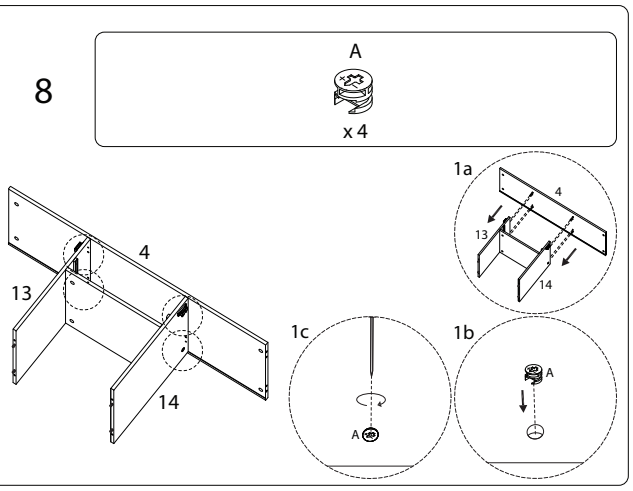

8/23

9

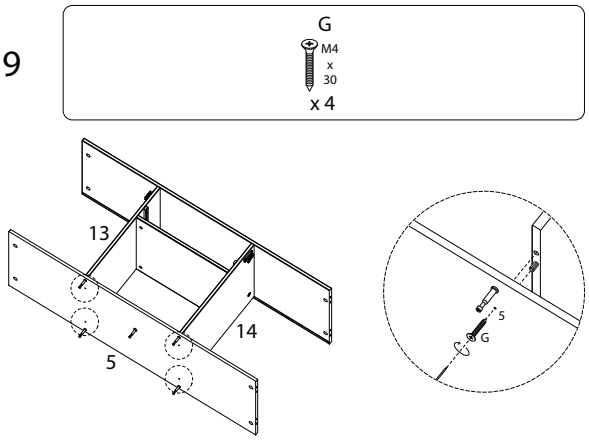

10

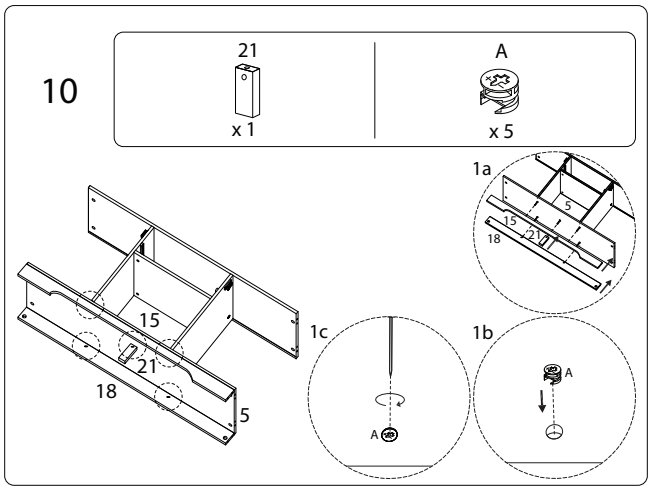

9/23

11

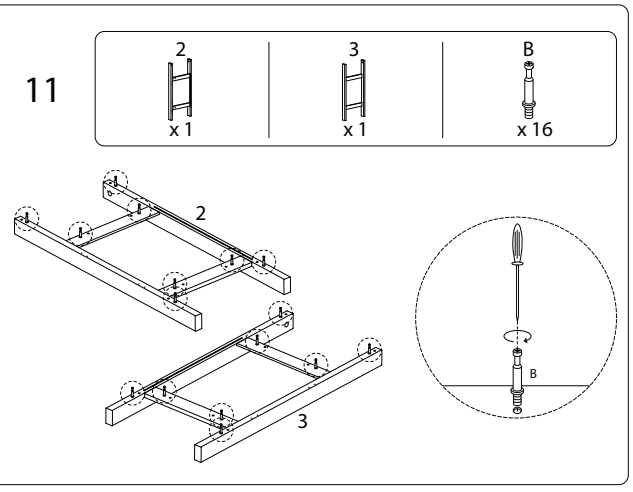

13

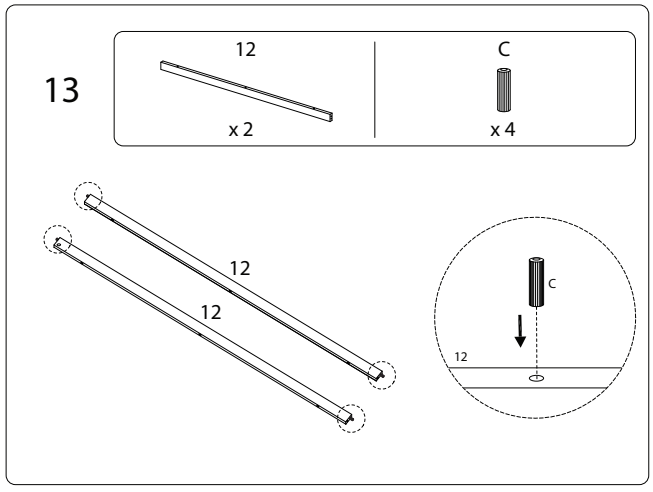

12

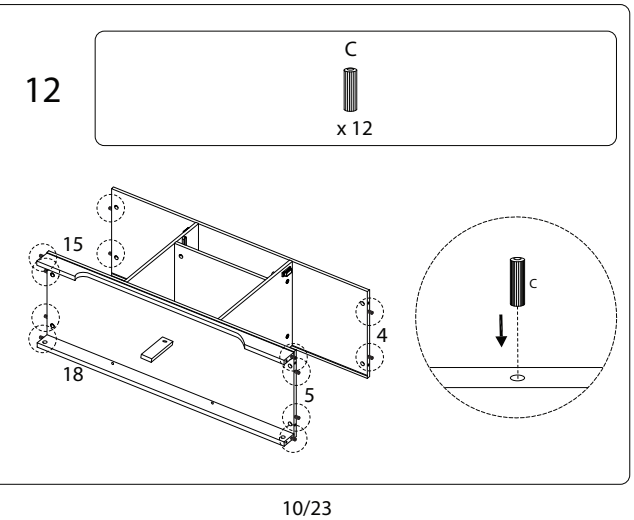

10/23

14

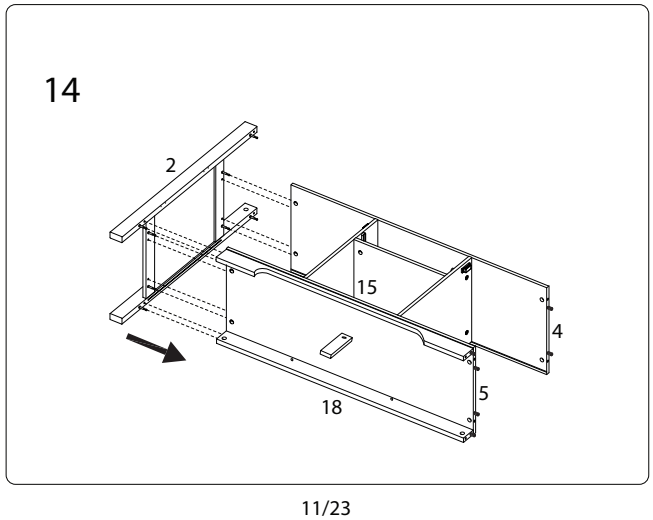

11/23

15

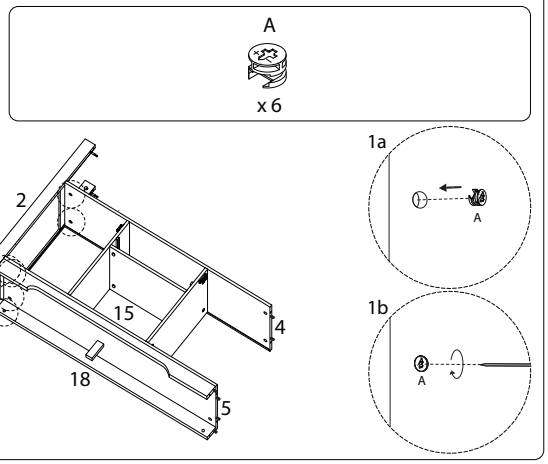

16

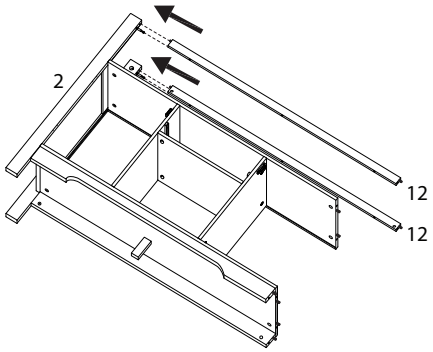

12/23

17

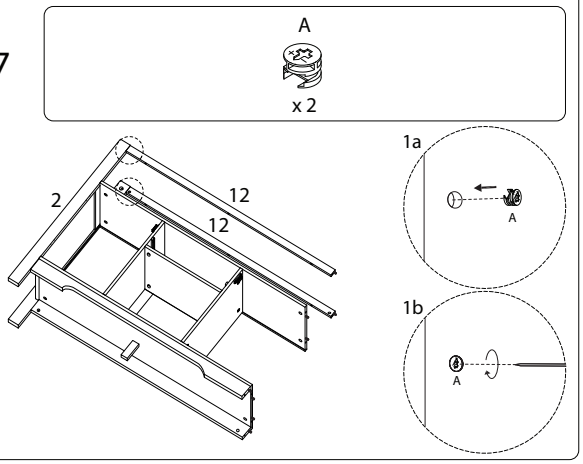

18

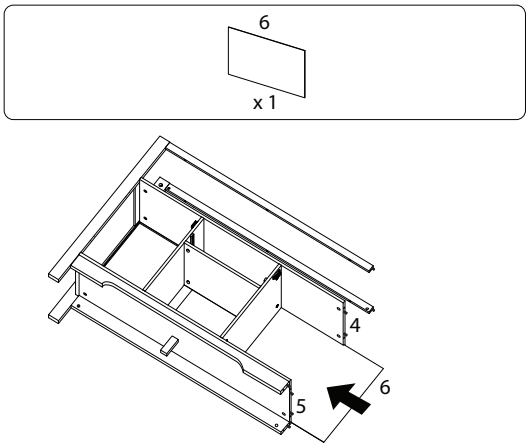

13/23

19

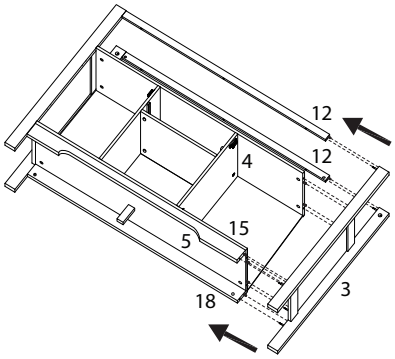

20

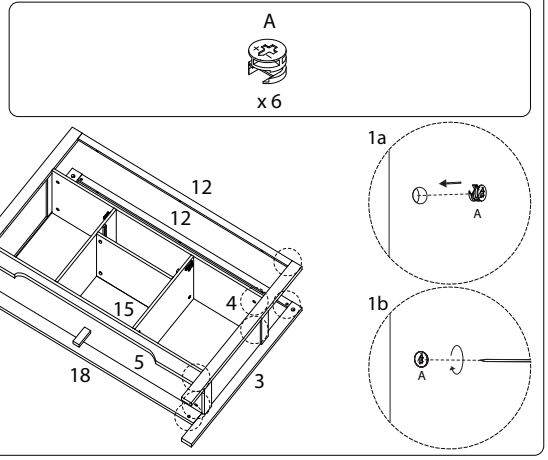

14/23

21

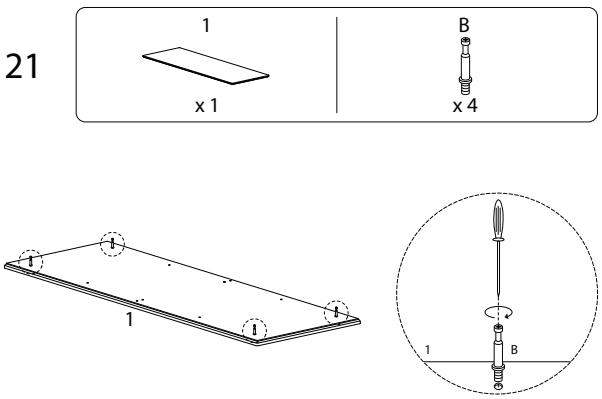

22

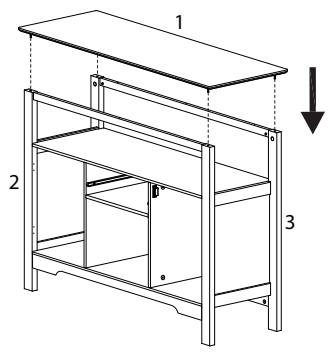

15/23

23

A x 4

H x 4

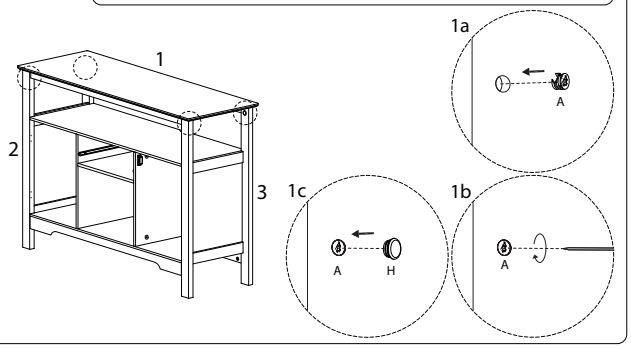

24

G M4 x 30 x 6

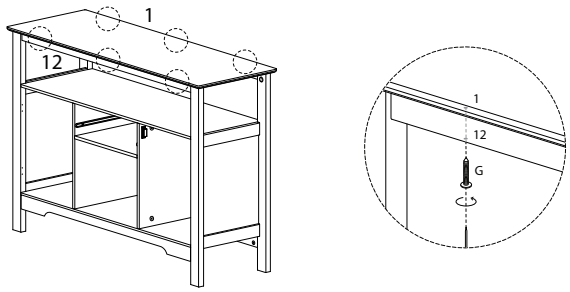

25

7 x 3

8 x 2

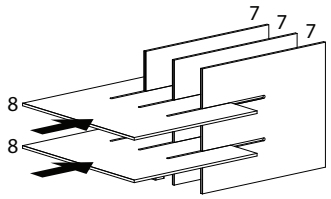

26

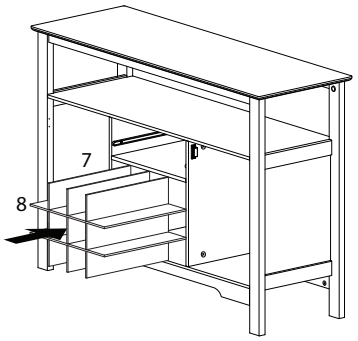

27

10 x 1

11 x 1

E M3 x 12 x 10

M x 2

K x 4

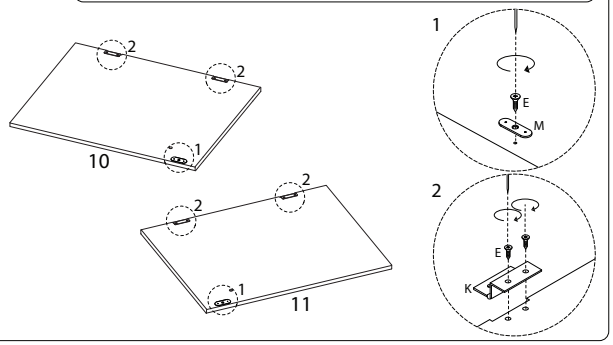

28

N x 2

F M4 x 18 x 2

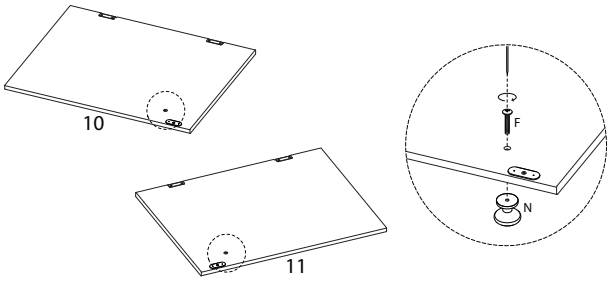

29

E M3 x 12 x 8

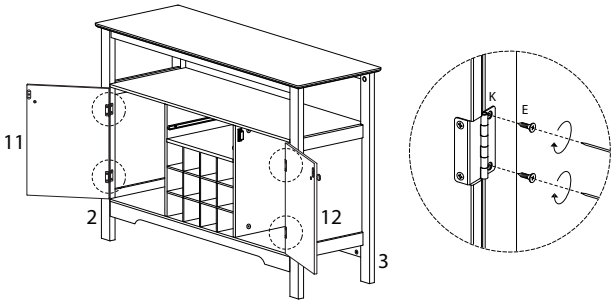

30

17 x 1

19 x 1

22 x 1

G M4 x 30 x 4

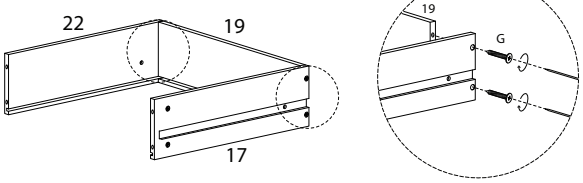

31

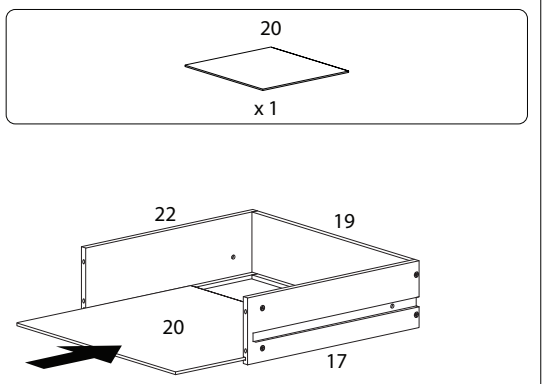

32

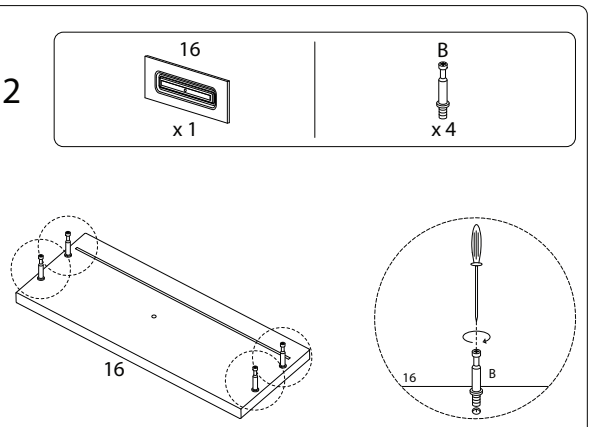

33

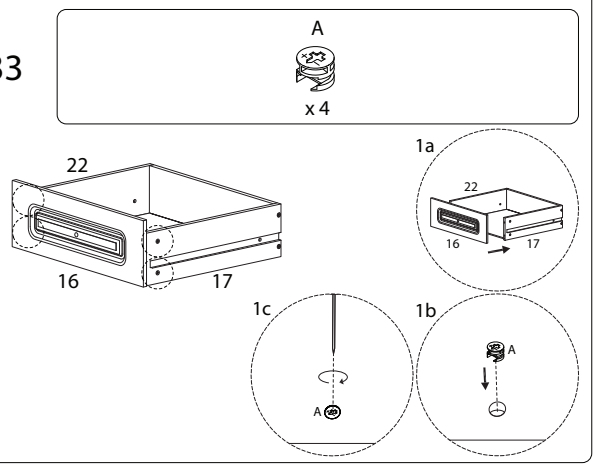

34

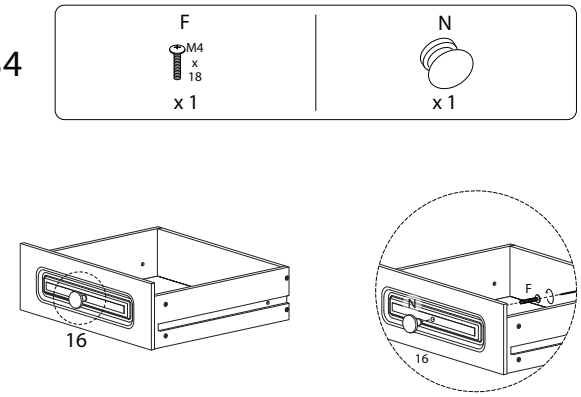

35

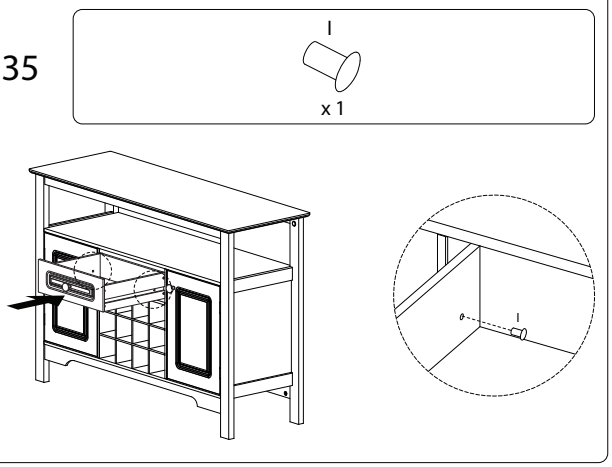

36

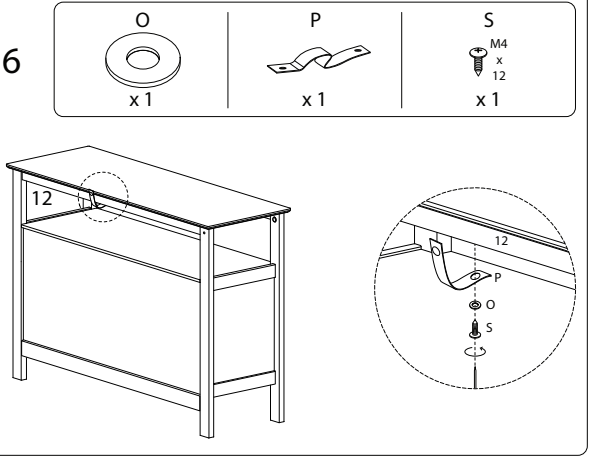

37

