SALTON

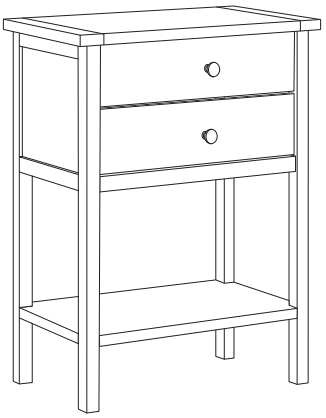

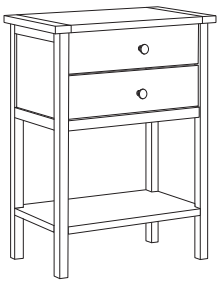

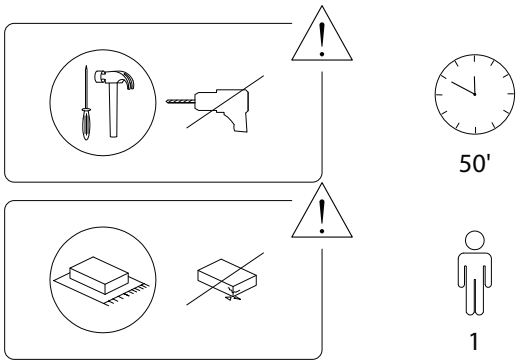

1/9

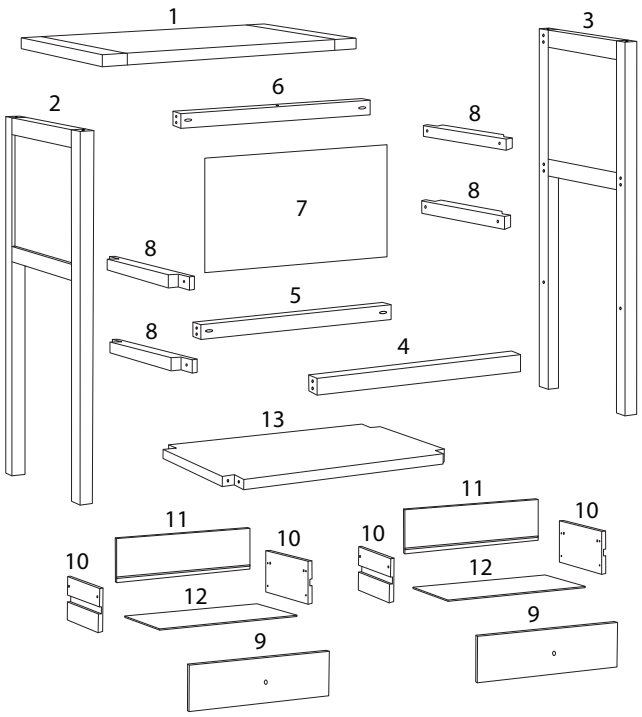

A	B	C	D	E	F
x 24	M4 x 40 x 19	M3 x 30 x 24	x 18	x 2	x 2

2/9

1 x 1	2 x 1	3 x 1
4 x 1	5 x 1	6 x 1
7 x 1	8 x 4	9 x 2
10 x 4	11 x 2	12 x 2
13 x 1		

3/9

1

A x 20 | 2 x 1 | 3 x 1

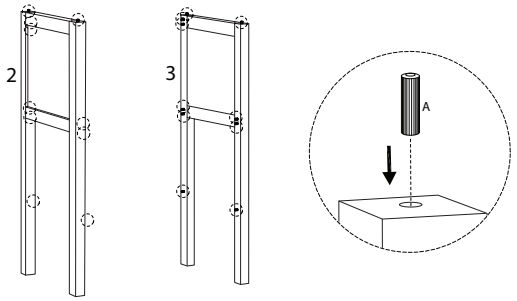

2

4 x 1 | 5 x 1 | 6 x 1 | 13 x 1

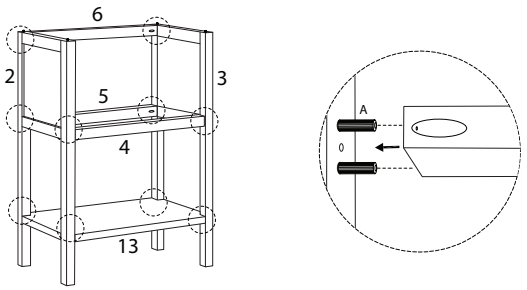

3

B M4 x 40 x 14

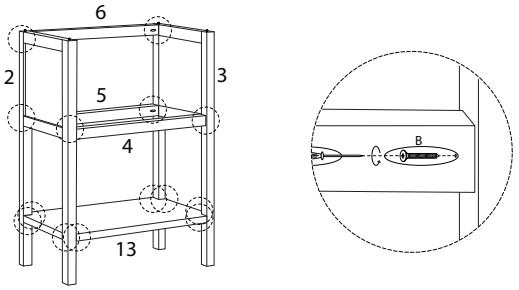

4

B M4 x 40 x 5 | 1 x 1

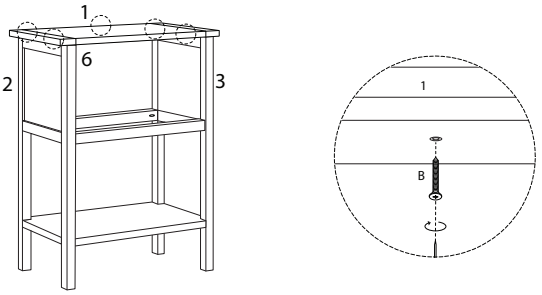

5

C M3 x 30 x 8 | 8 x 4

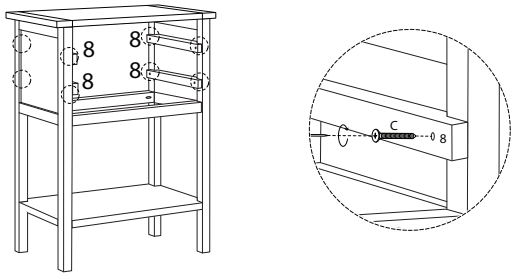

7 x 2

9 x 1 | 10 x 2 | C M3 x 30 x 4

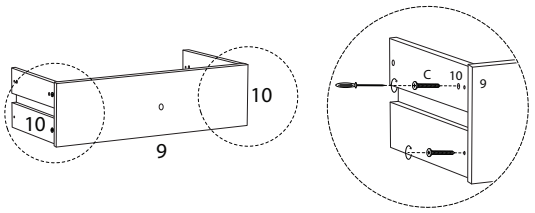

6

D x 18 | 7 x 1

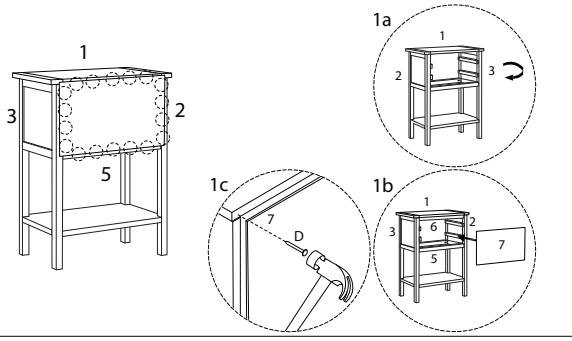

8 x 2

11 x 1 | 12 x 1 | C M3 x 30 x 4

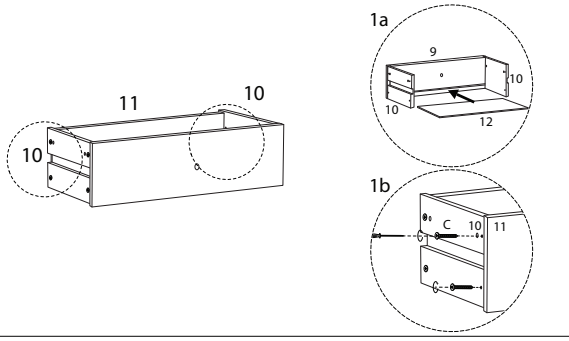

9 x 2

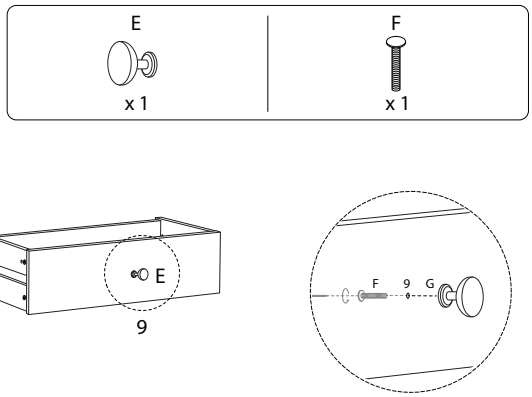

10 x 2

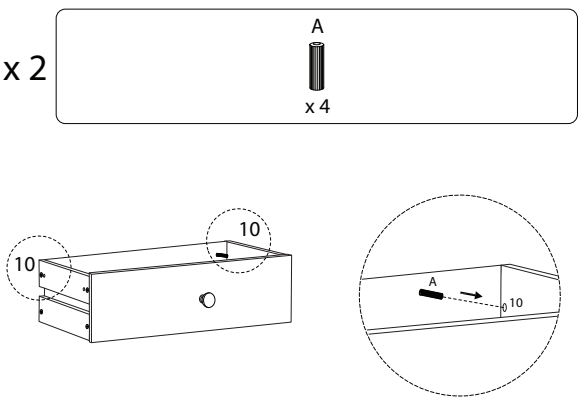

!

