LEVANGER

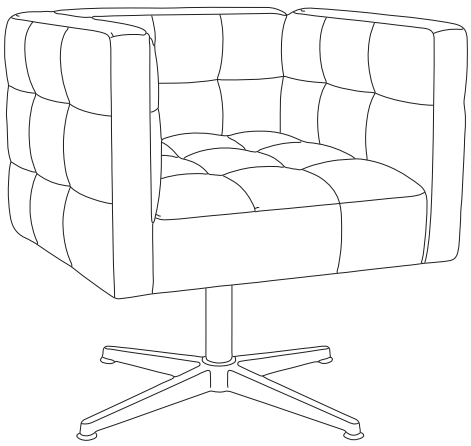

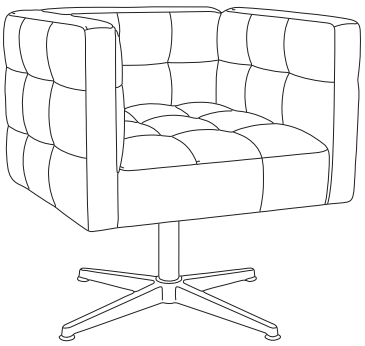

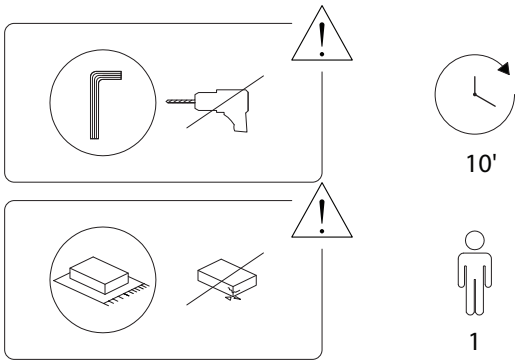
10'
1

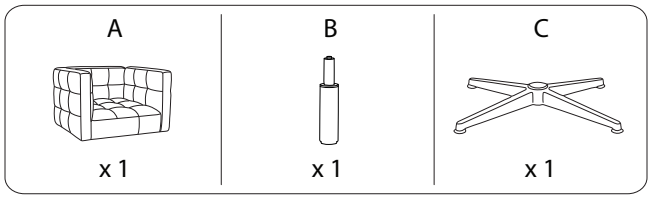
A
x 1
B
x 1
C
x 1

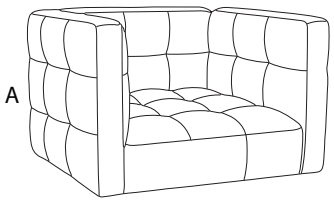
A


D

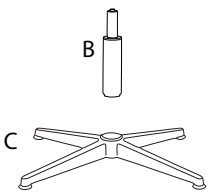
B
C

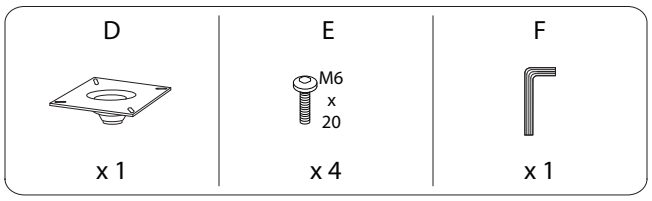
D
x 1
E
M6
x
20
x 4
F
x 1

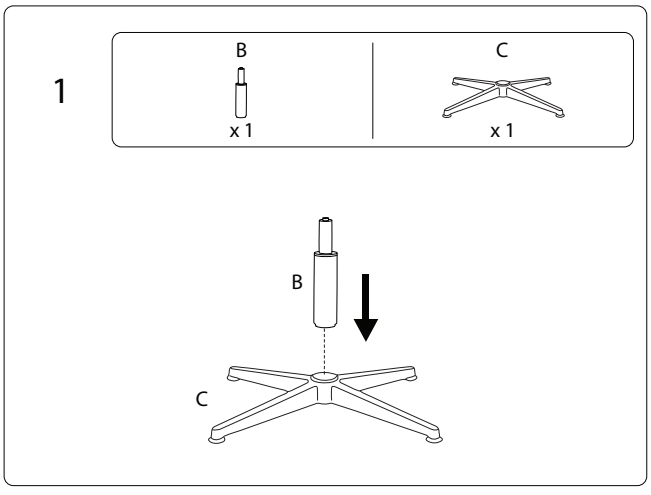
1
B
x 1
C
x 1
B
C

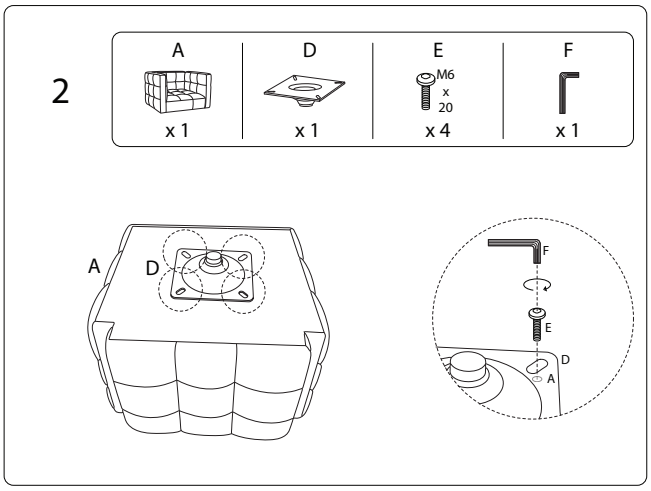
2
A
x 1
D
x 1
E
M6
x
20
x 4
F
x 1
A
D
F
E
D
A

3

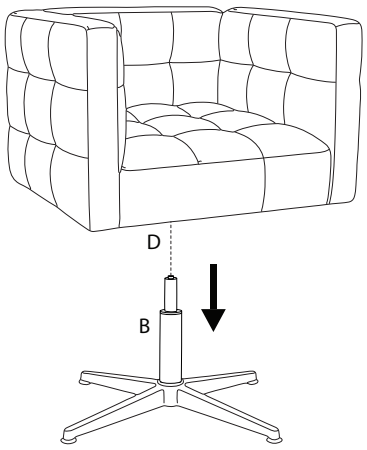

3026/LEVANGER/290926