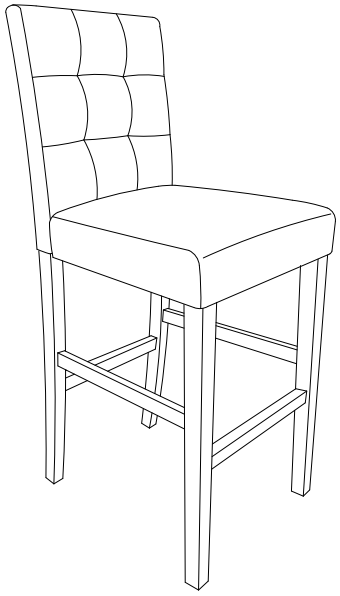

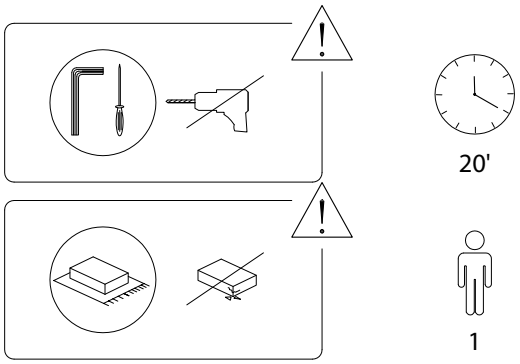

1/5

778/MADISON/260819/

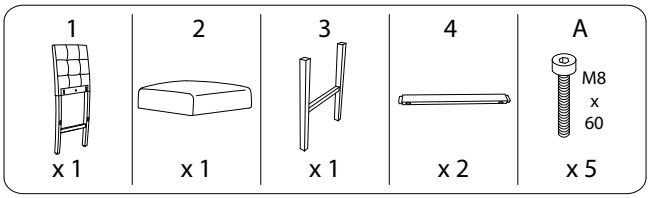

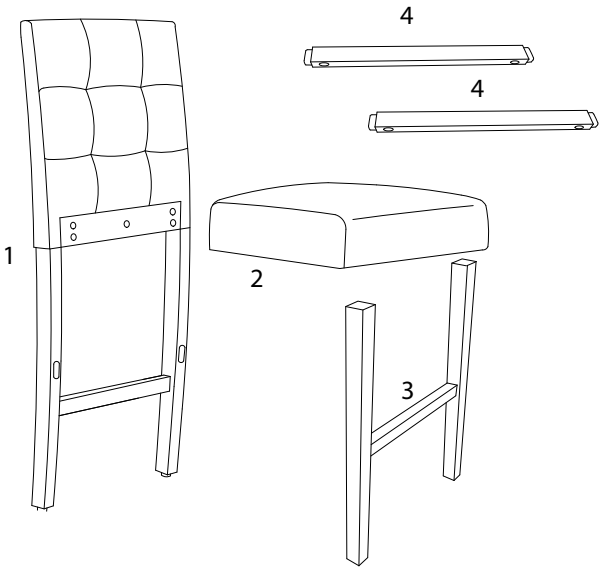

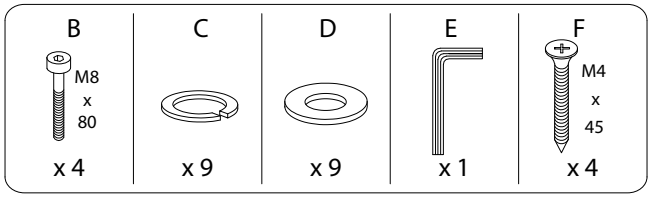

2/5

778/MADISON/260819/

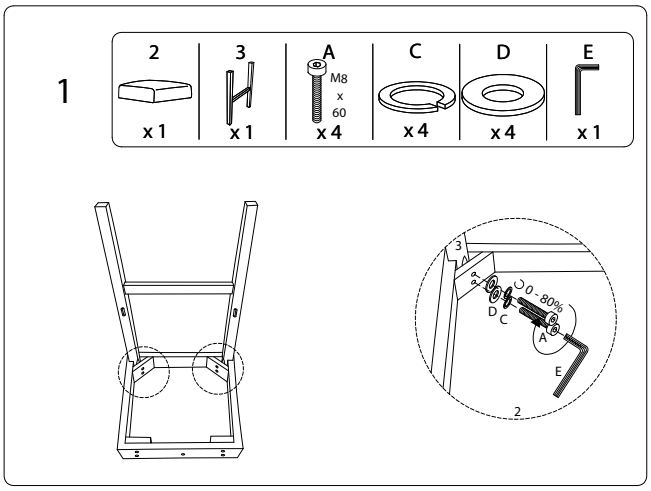

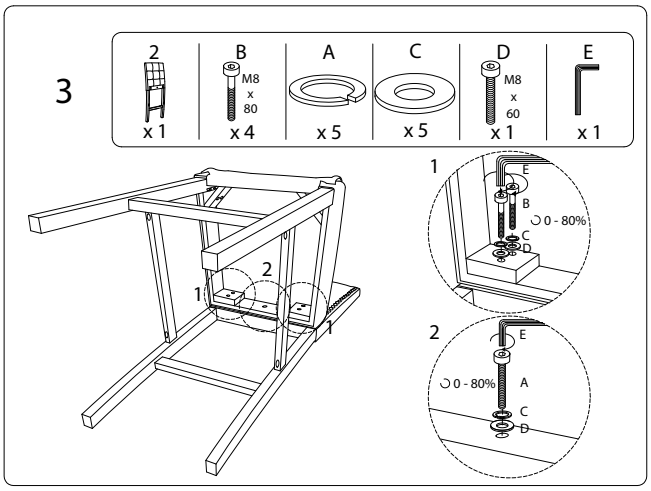

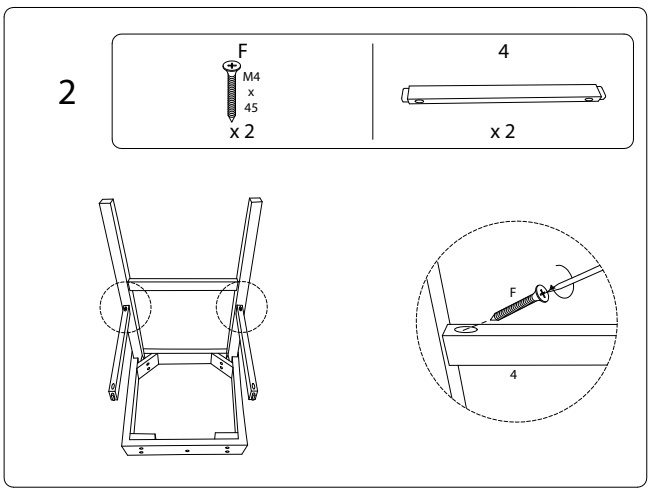

3/5

778/MADISON/260819/

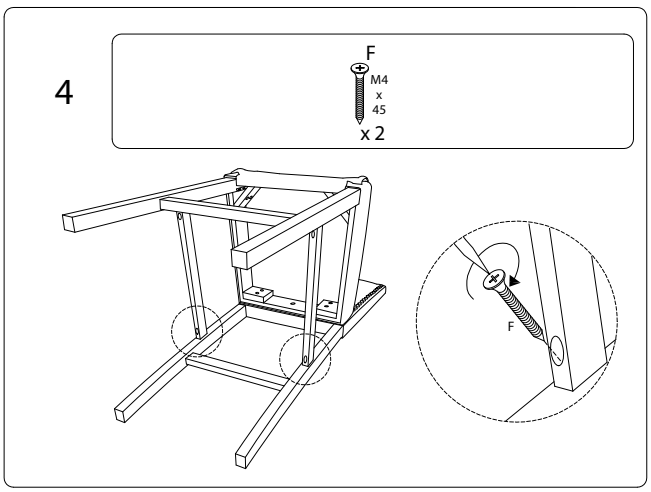

4/5

778/MADISON/260819/

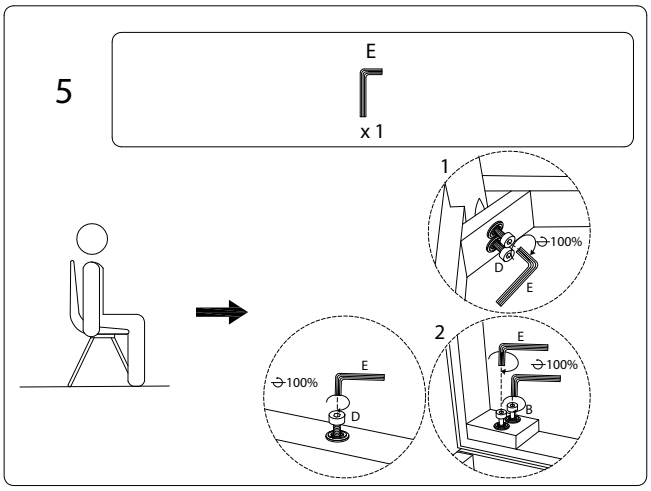

778/MADISON/260819/