VERDAL

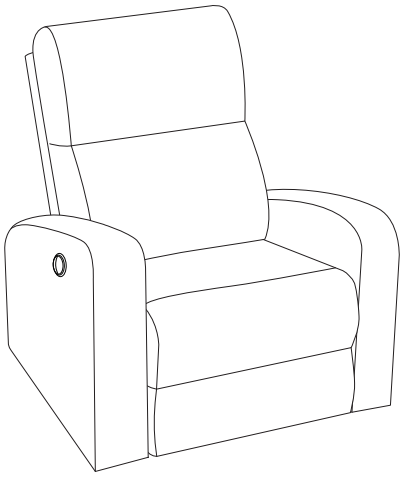

1/7

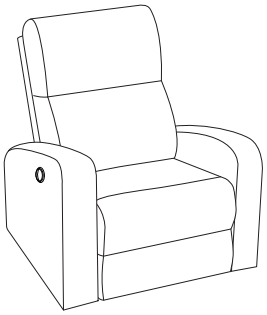

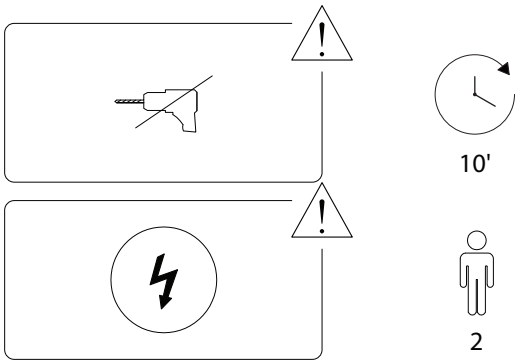

2/7

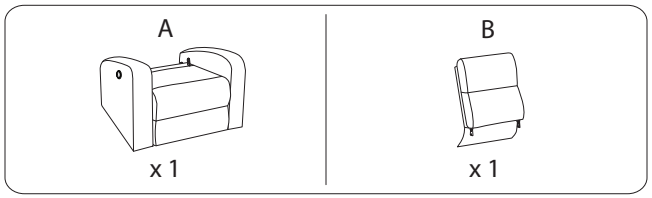

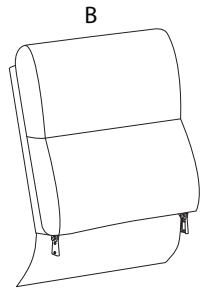

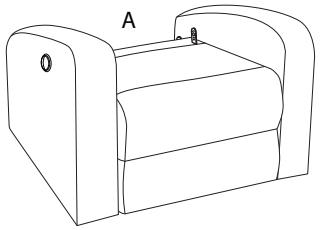

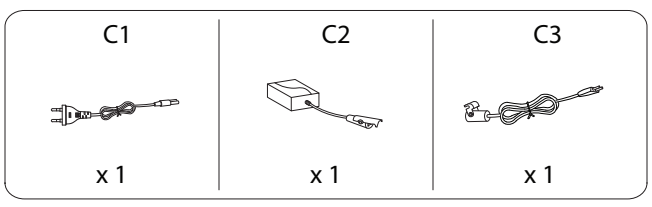

3/7

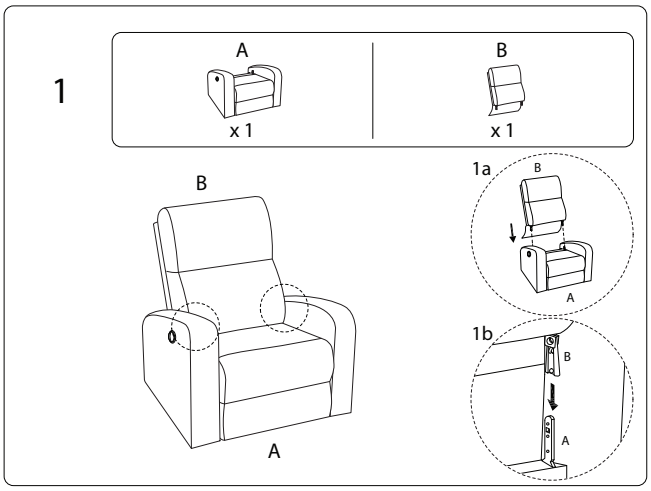

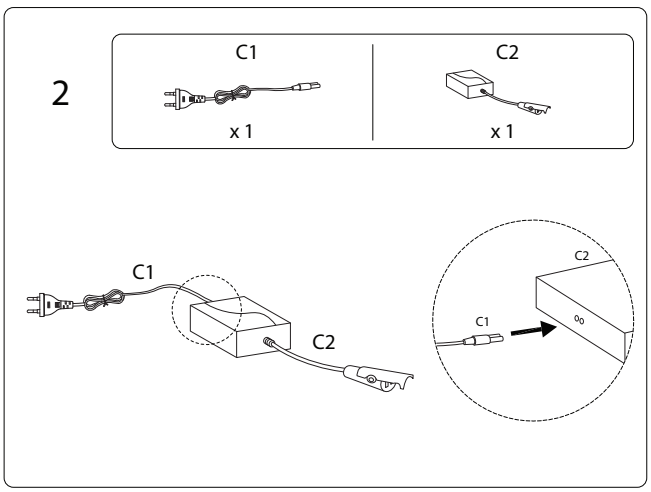

4/7

3

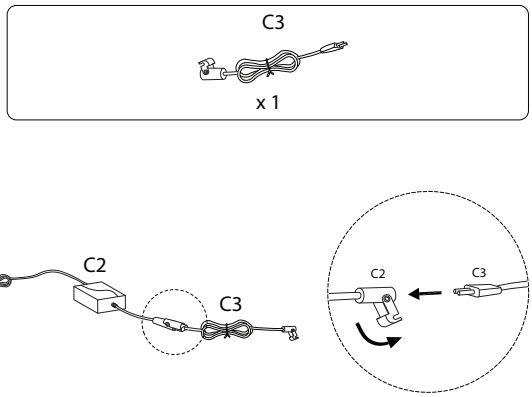

4

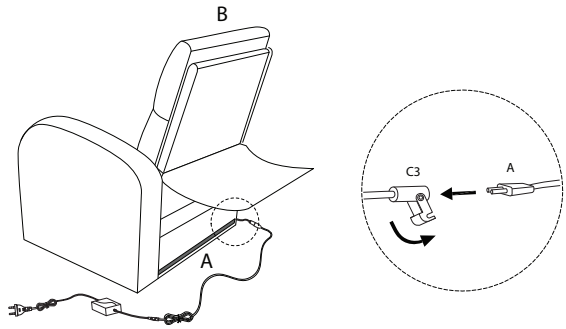

5/7

5

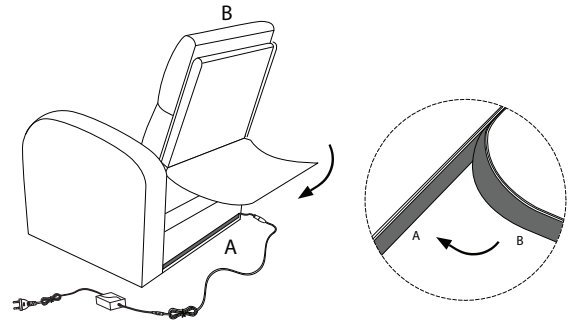

!

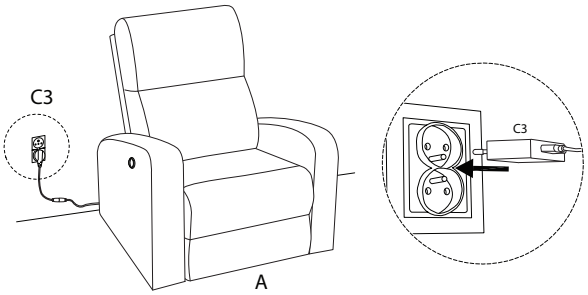

6/7

!

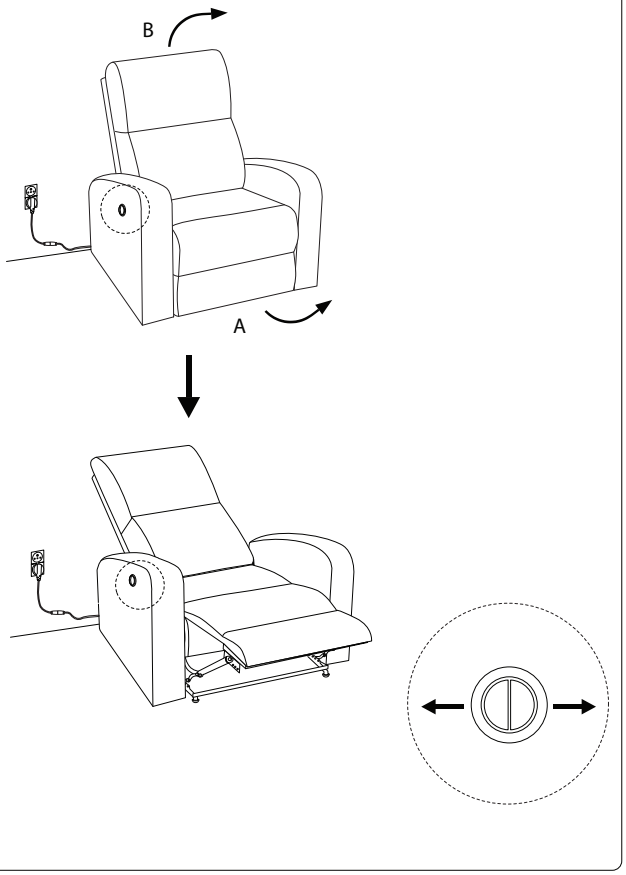

7/7