SKIEN

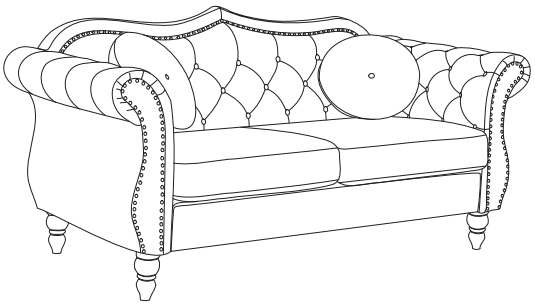

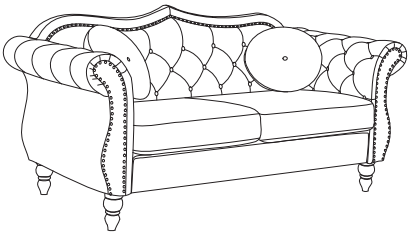

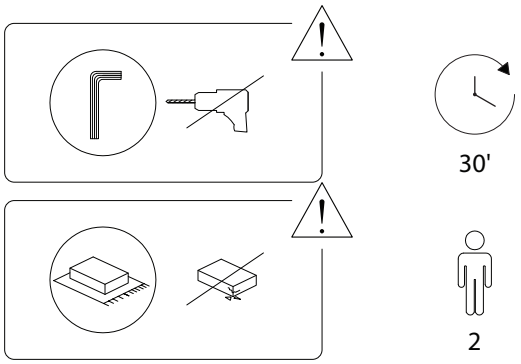

1/7

2/7

1352/SKIEN/301225/

A	BR	BL	C	D
x 1	x 1	x 1	x 1	x 1

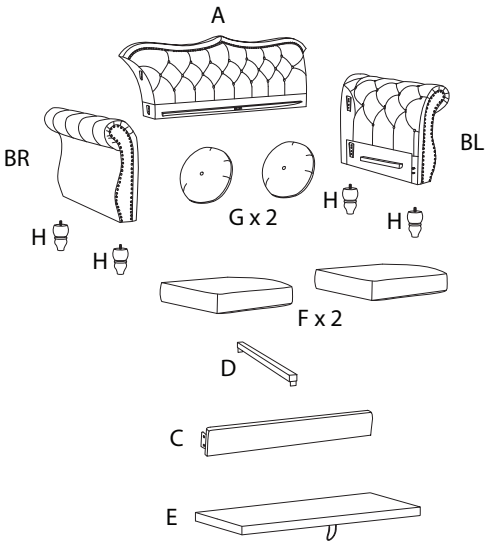

E	F	G	H	J
x 1	x 2	x 2	x 4	x 1

3/7

1352/SKIEN/301225/

!

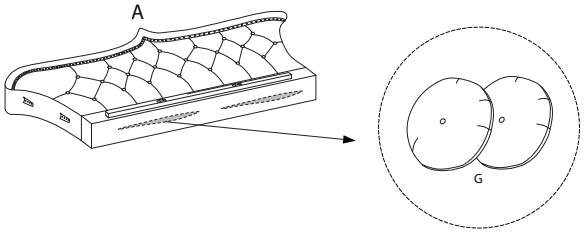

1

BR	BL	H
x 1	x 1	x 4

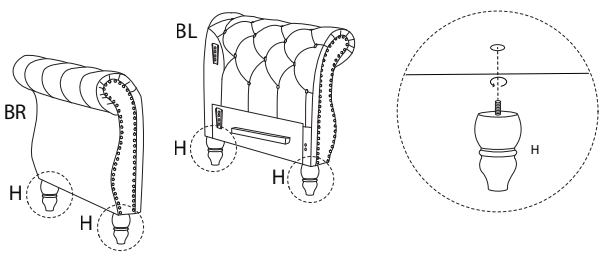

4/7

1352/SKIEN/301225/

2

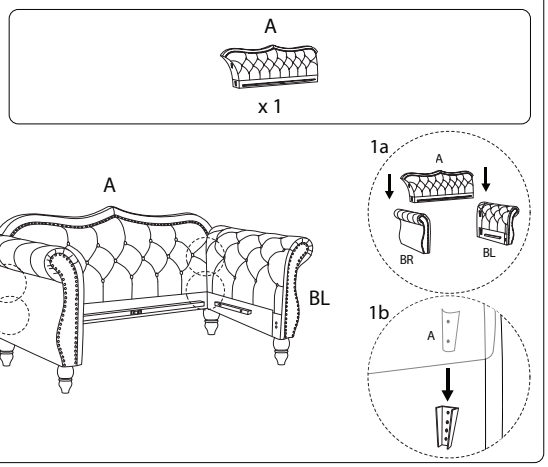

3

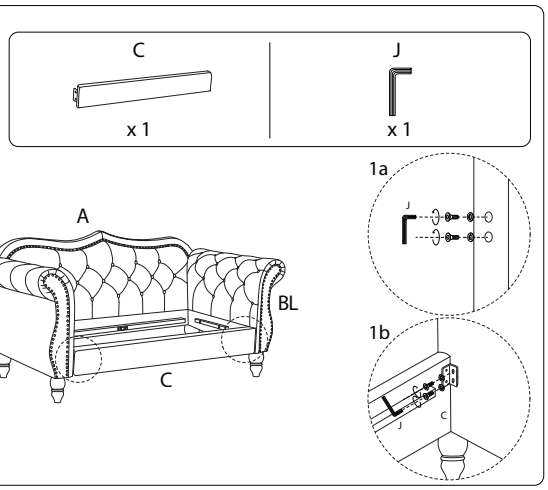

5/7

1352/SKIEN/301225/

4

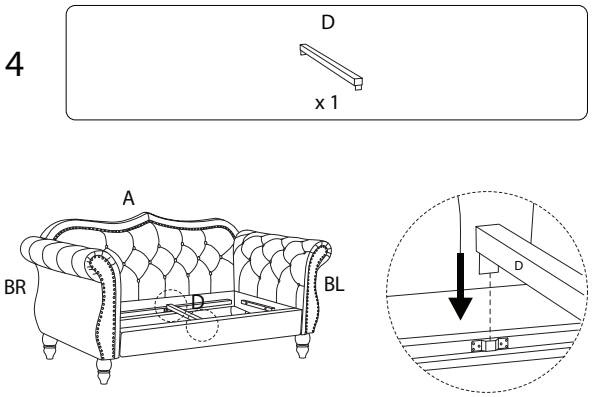

5

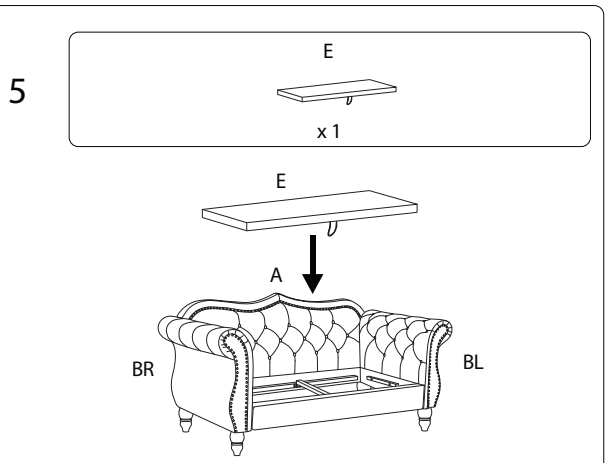

6/7

1352/SKIEN/301225/

6

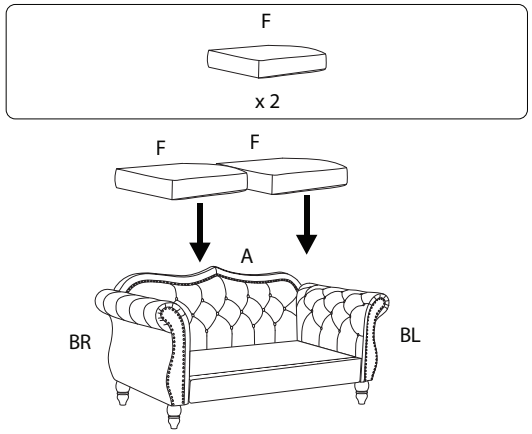

7/7

1352/SKIEN/301225/