RONGE

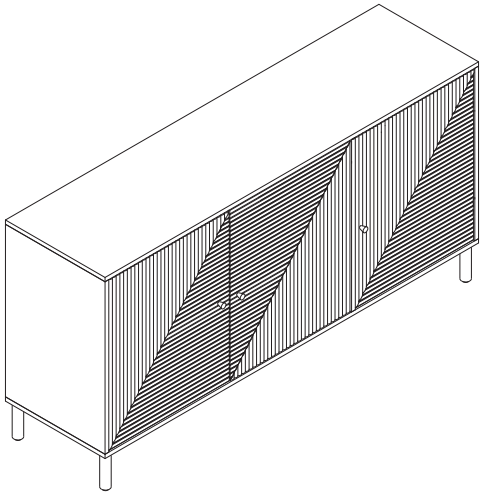

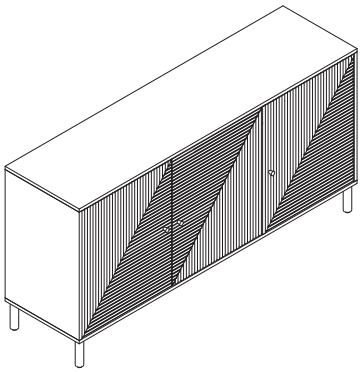

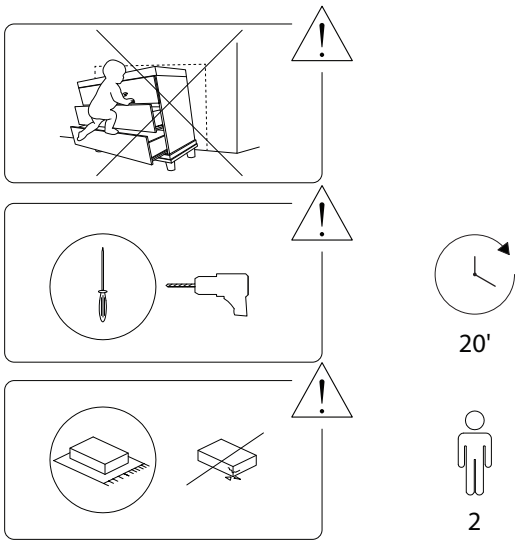
20'
2

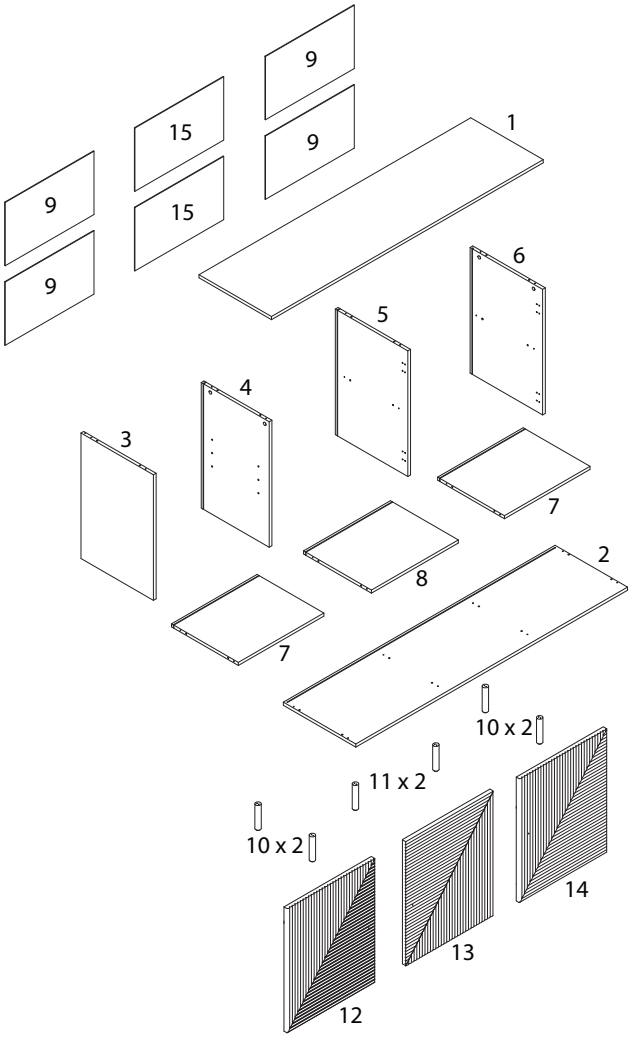
9
15
9
1
9
15
9
6
5
4
3
7
8
2
7
10 x 2
11 x 2
10 x 2
14
13
12

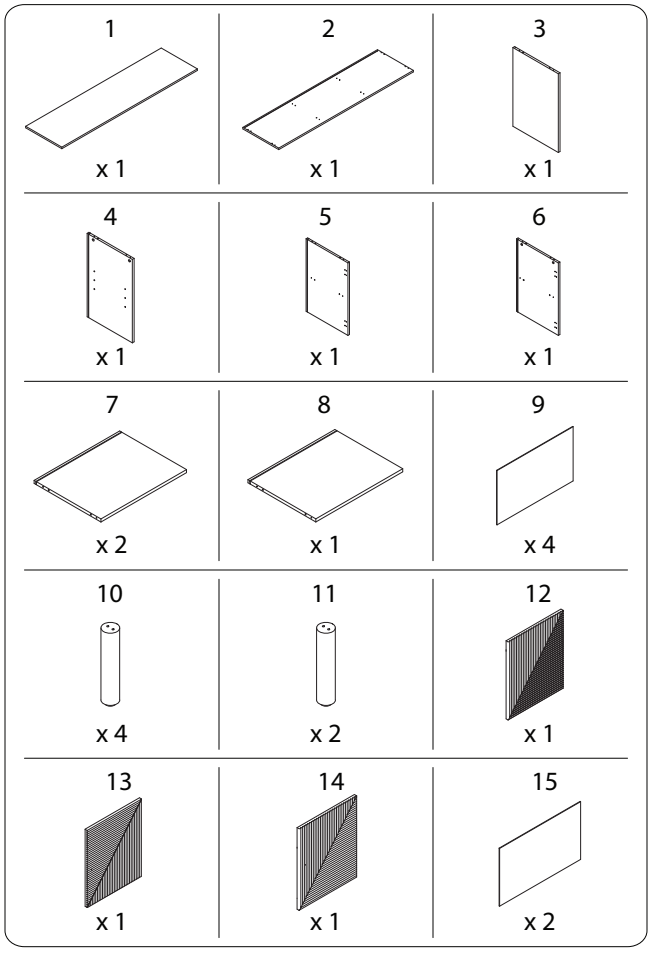
1
x 1
2
x 1
3
x 1
4
x 1
5
x 1
6
x 1
7
x 2
8
x 1
9
x 4
10
x 4
11
x 2
12
x 1
13
x 1
14
x 1
15
x 2

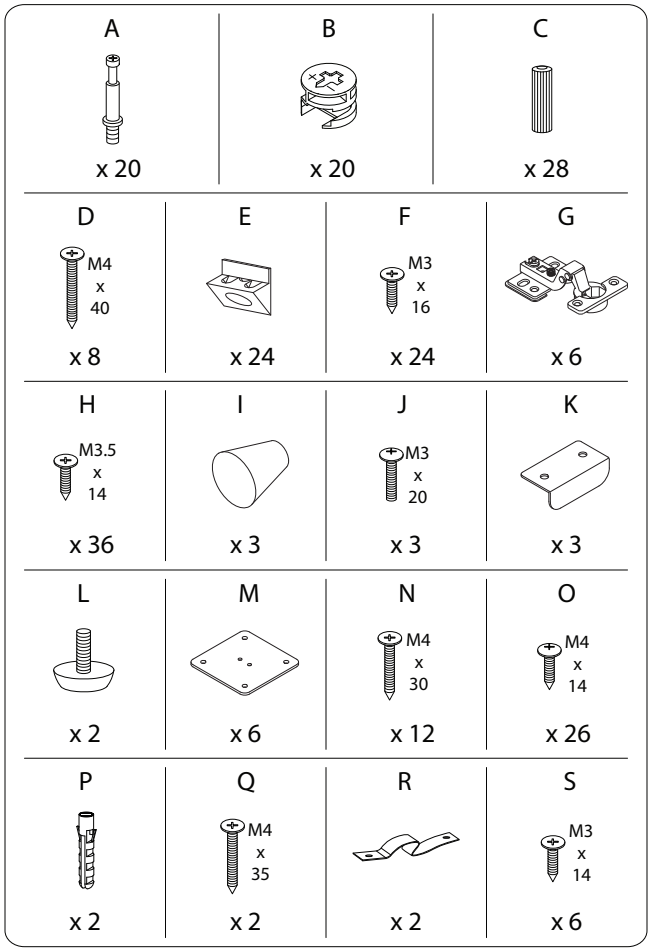
A
x 20
B
x 20
C
x 28
D
M4 x 40
x 8
E
x 24
F
M3 x 16
x 24
G
x 6
H
M3.5 x 14
x 36
I
x 3
J
M3 x 20
x 3
K
x 3
L
x 2
M
x 6
N
M4 x 30
x 12
O
M4 x 14
x 26
P
x 2
Q
M4 x 35
x 2
R
x 2
S
M3 x 14
x 6

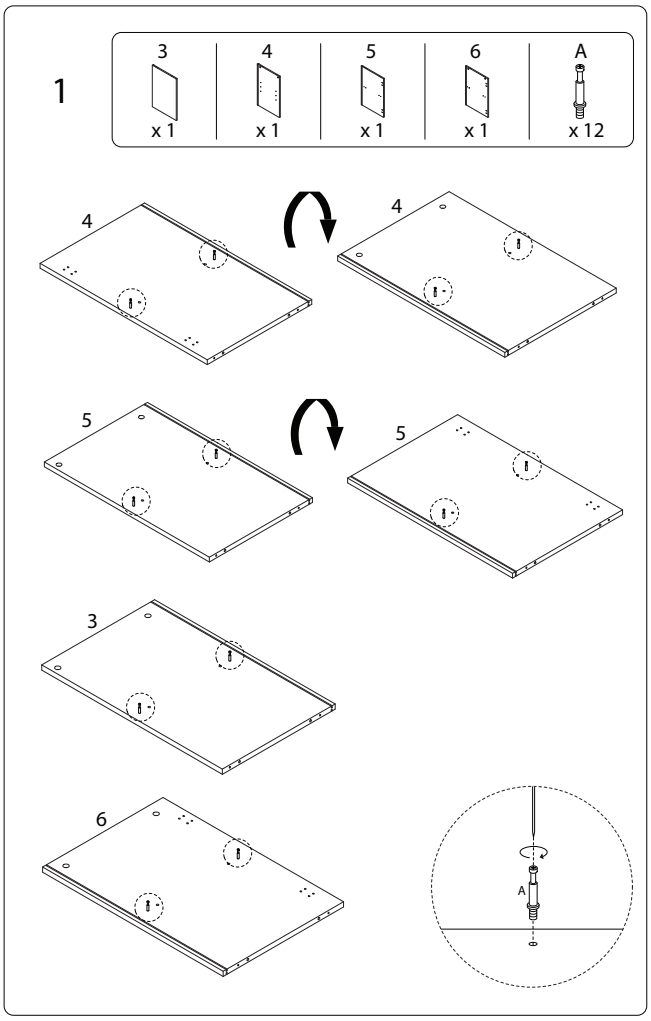
1
3
x 1
4
x 1
5
x 1
6
x 1
A
x 12
4
4
5
5
3
6
A

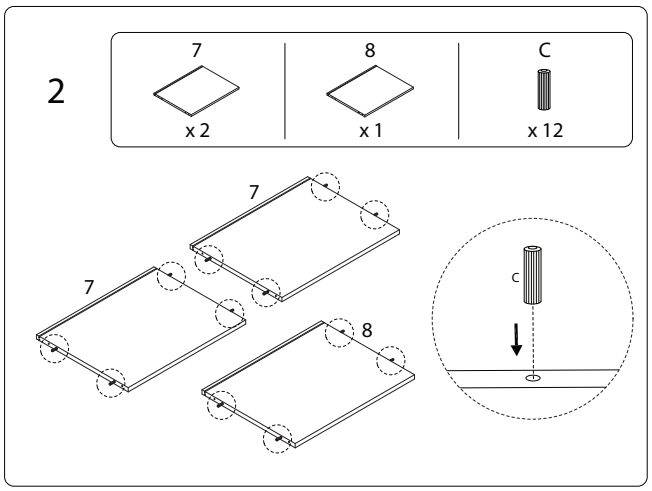
2
7
x 2
8
x 1
C
x 12
7
7
8
C

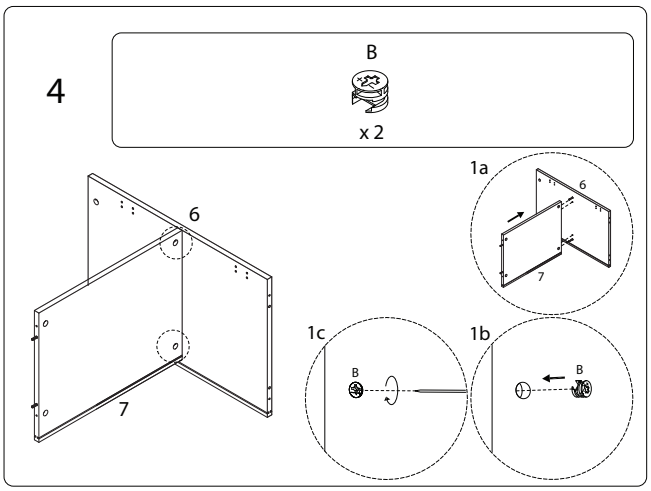
4
B
x 2
1a
6
6
7
7
1c
1b
B
B

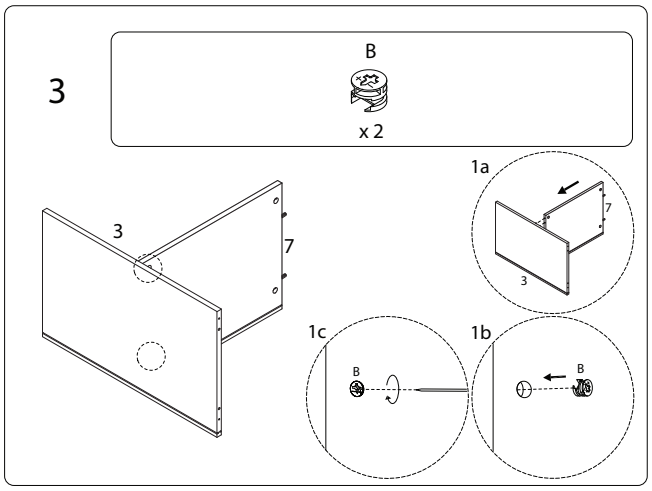
3
B
x 2
1a
7
3
7
3
1c
1b
B
B

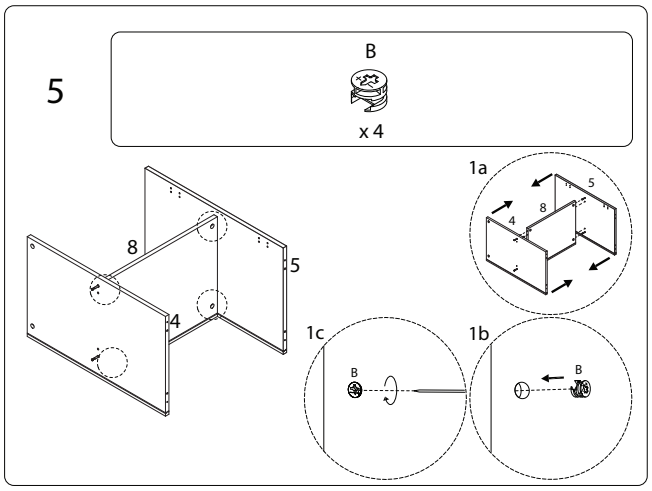
5
B
x 4
1a
5
8
4
8
5
4
1c
1b
B
B

6

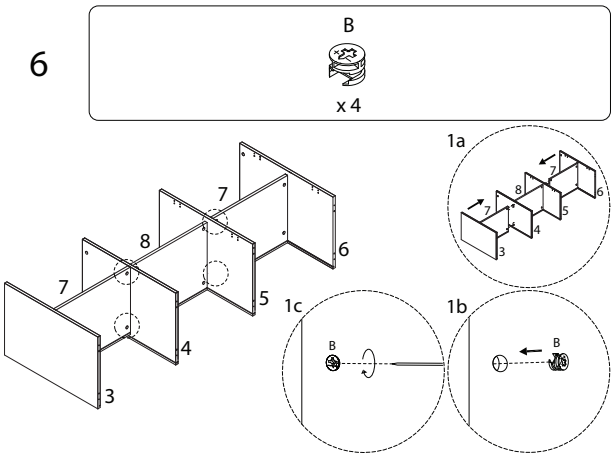

7

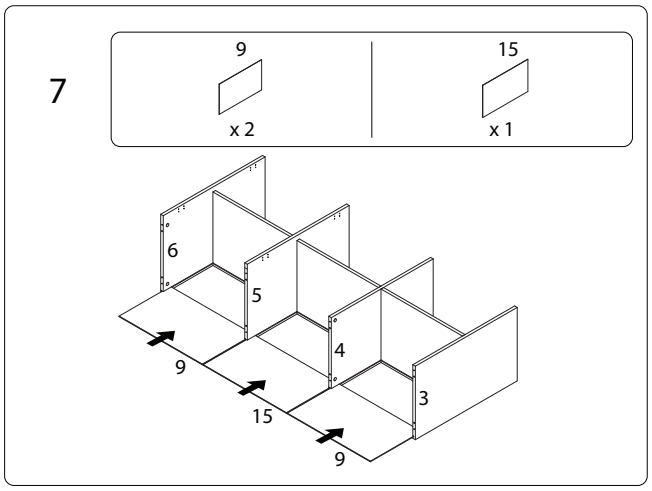

8

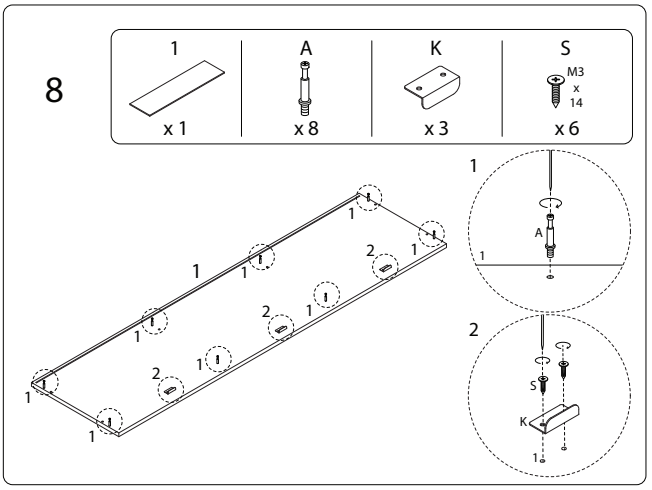

9

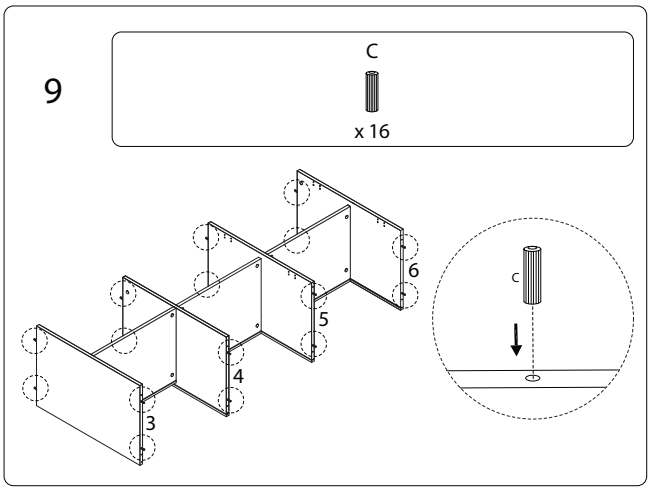

10

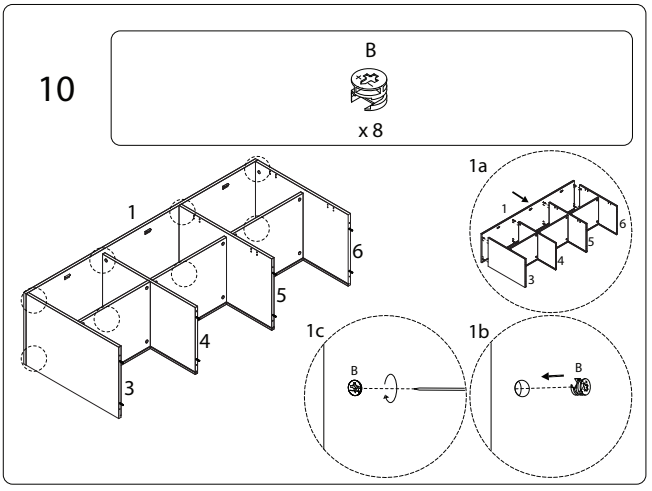

11

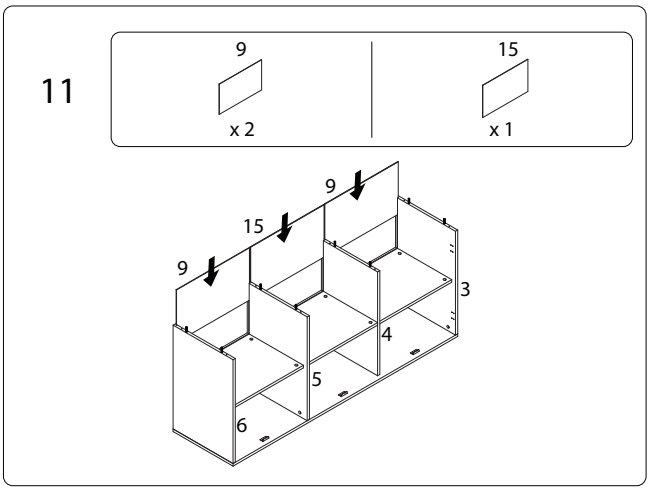

12

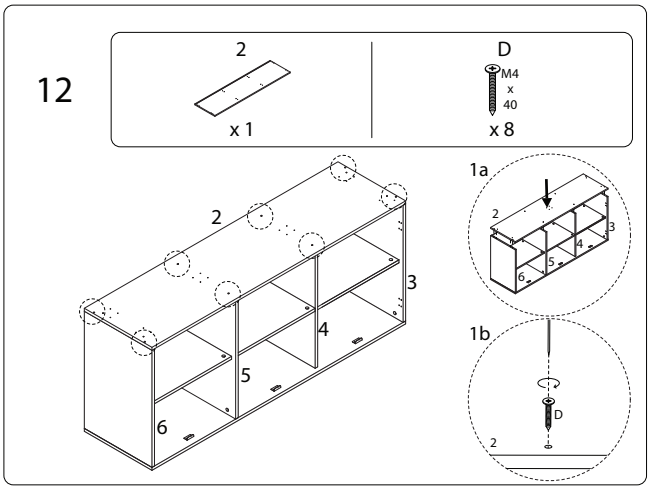

13 x 4

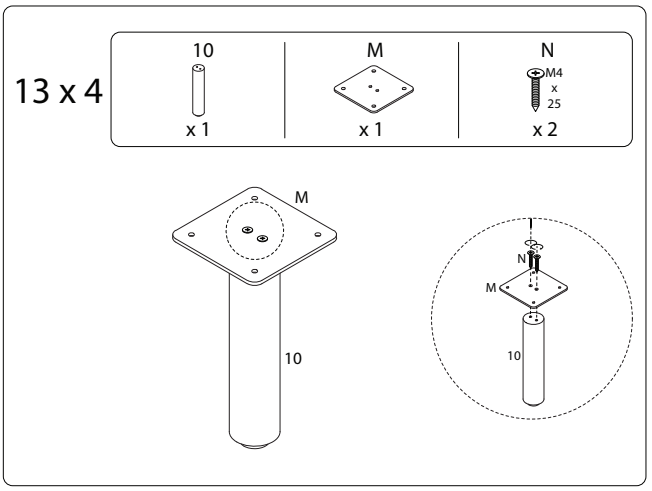

14 x 2

11	M	N
x 1	x 1	M4 x 25 x 2

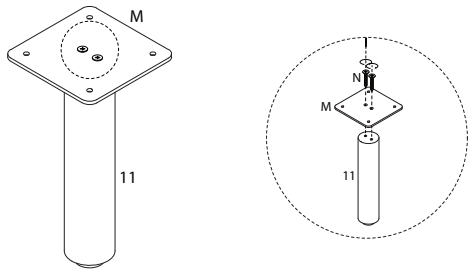

15

L	O
x 2	M4 x 14 x 24

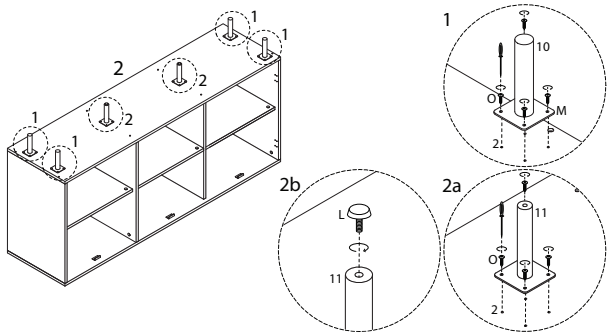

16

12	G	H	I	J
x 1	x 2	M3.5 x 14 x 4	x 1	M3 x 20 x 1

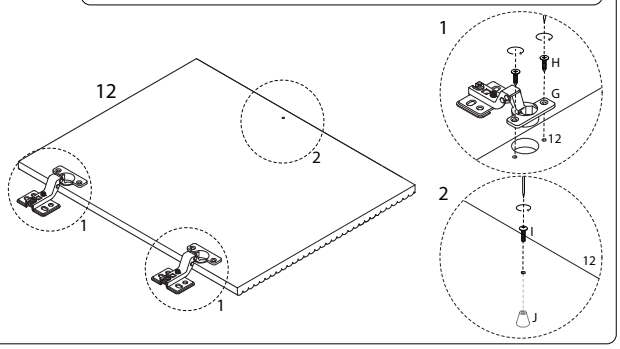

17

13	14	G	H	I	J
x 1	x 1	x 4	M3.5 x 14 x 8	x 2	M3 x 20 x 2

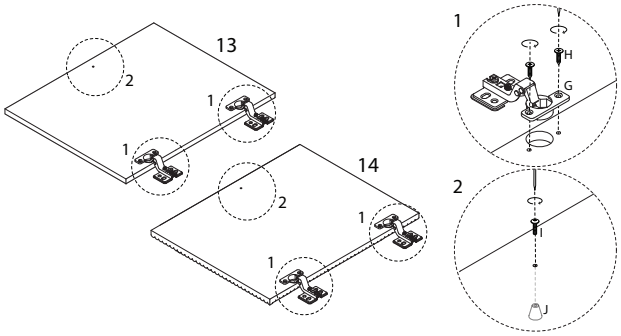

18

H
M3.5 x 14 x 24

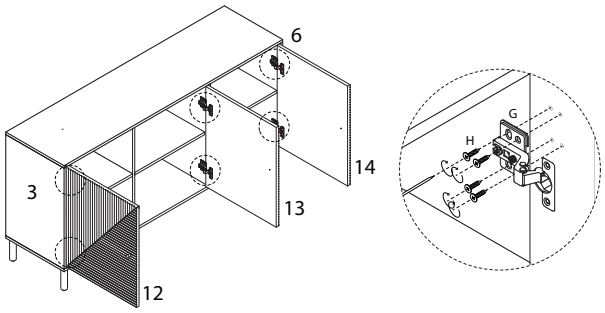

19

E	F
x 24	M3 x 16 x 24

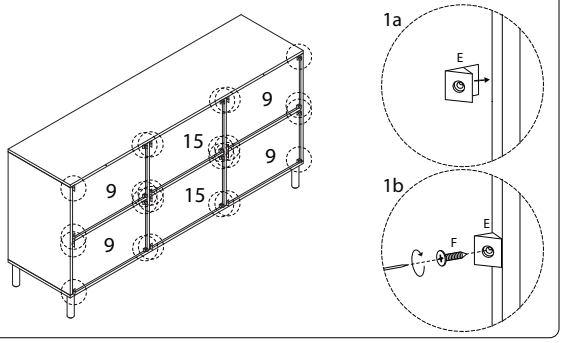

20

O	P	Q	R
M4 x 14 x 2		M4 x 35 x 2	

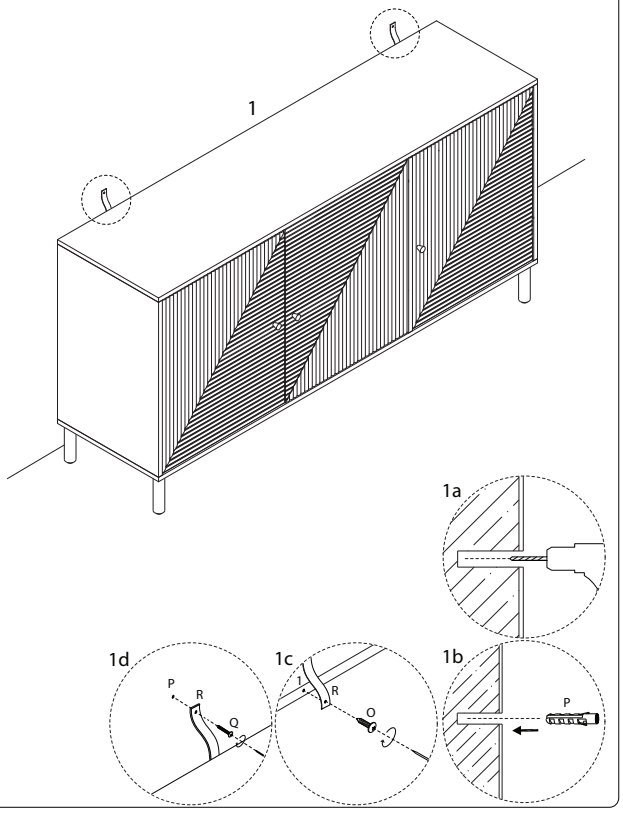

21

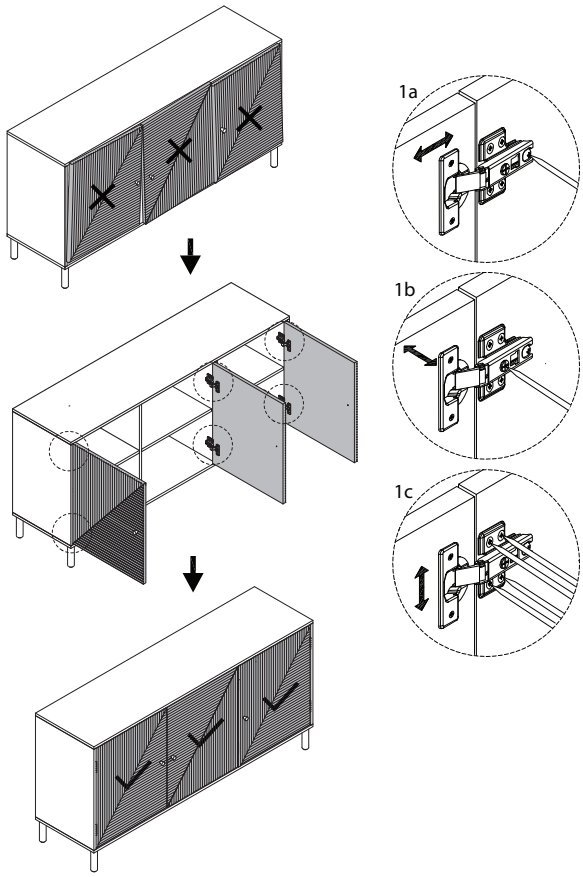

1363/RONGE/050626/