MATANE

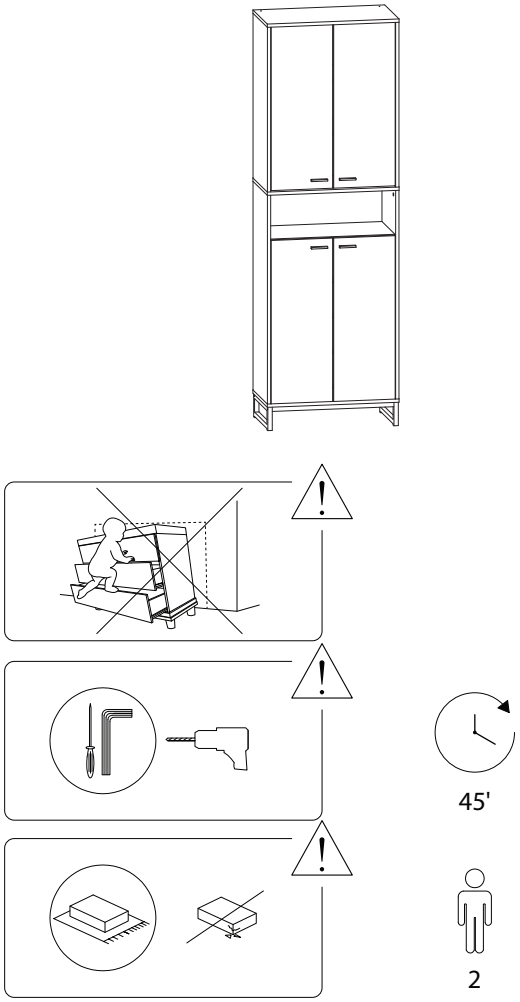
45'
2

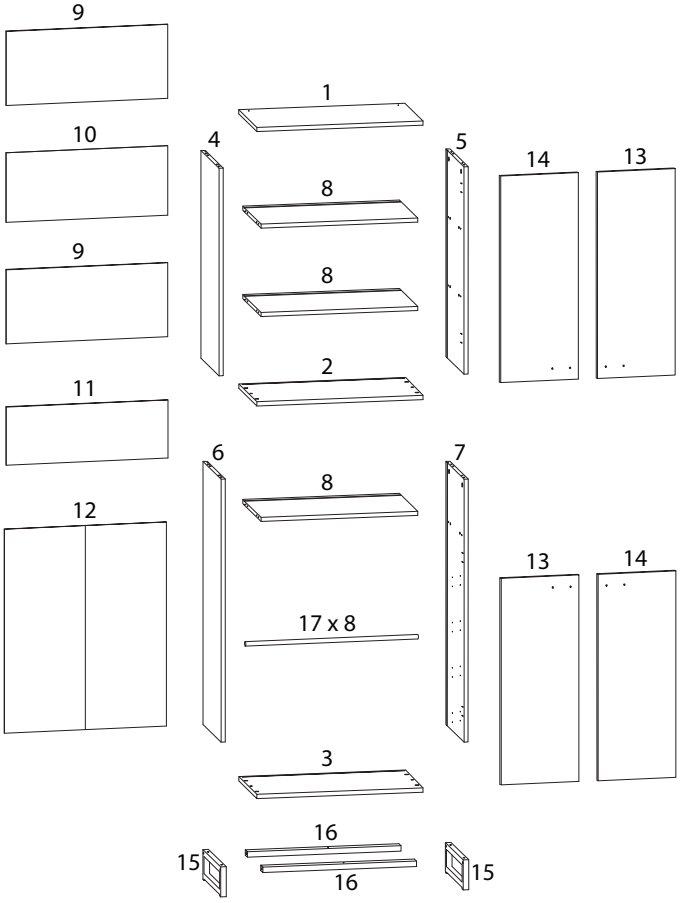
9
10
9
11
12
1
4
8
8
2
5
14
13
6
8
17 x 8
3
16
16
15
15
7
13
14

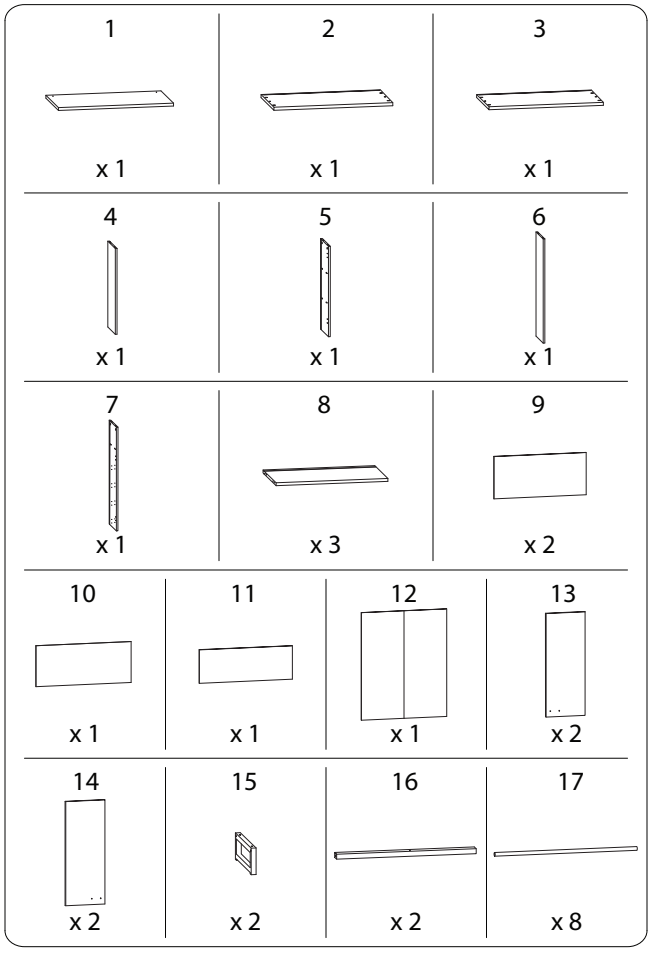
1
x 1
2
x 1
3
x 1
4
x 1
5
x 1
6
x 1
7
x 1
8
x 3
9
x 2
10
x 1
11
x 1
12
x 1
13
x 2
14
x 2
15
x 2
16
x 2
17
x 8

A	B	C
x 20	x 20	x 24
D	E	F
M7 x 40	M3.5 x 14	M6 x 40
x 8	x 80	x 4

G	H	I1	I2
M6 x 30		M3.5 x 14	
x 6	x 4	x 20	x 20
J	K	L1	L2
			M4 x 35
x 1	x 8	x 2	x 2
L3	L4	M	N
M3.5 x 12			M4 x 18
x 2	x 2	x 16	x 8

1

4	5	A
x 1	x 1	x 8

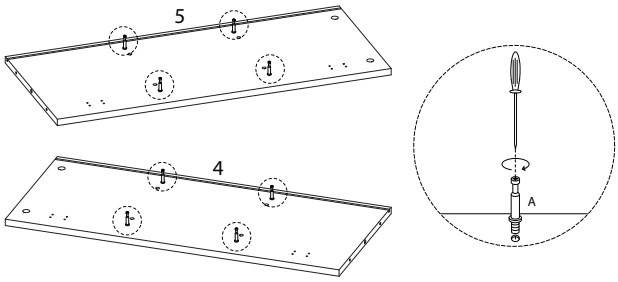

2 x 3

8	C
x 1	x 4

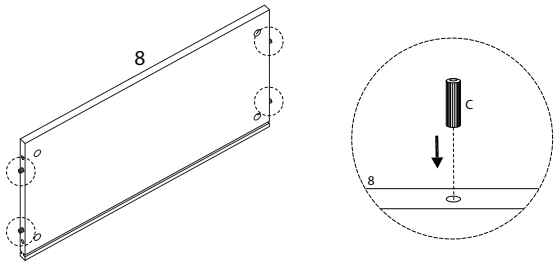

3

B
x 4

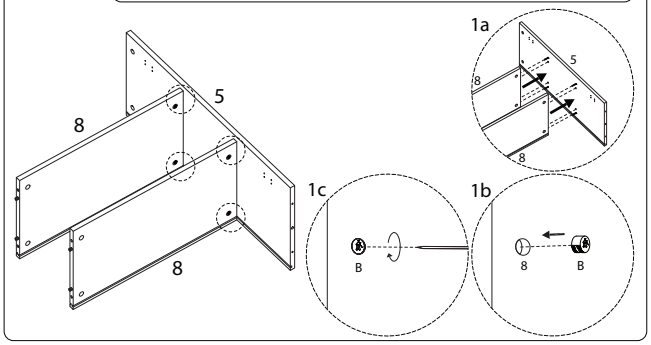

5

B
x 4

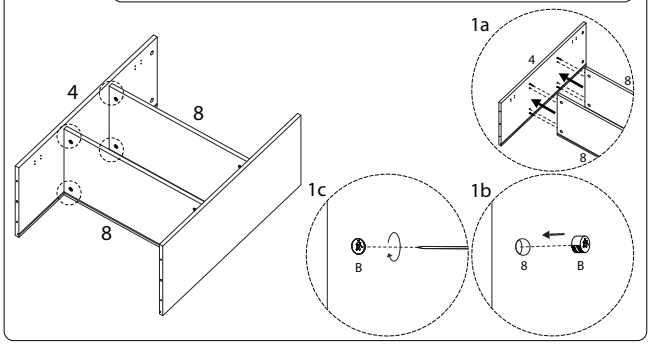

4

10
x 1

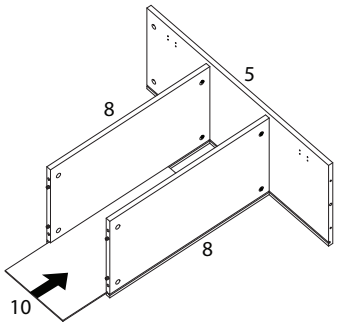

6

9	C
x 2	x 6

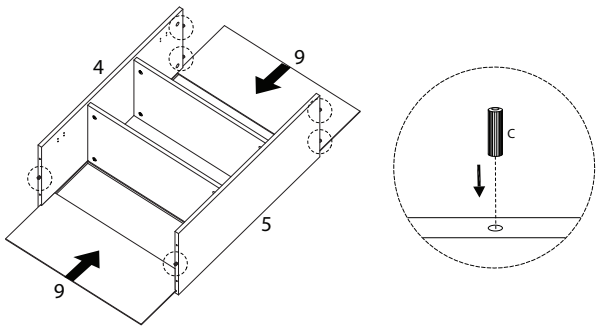

7

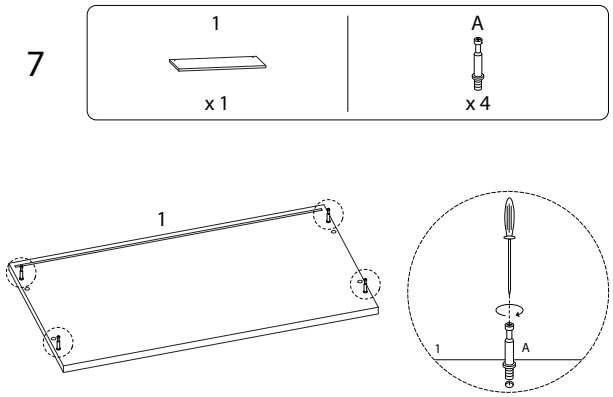

8

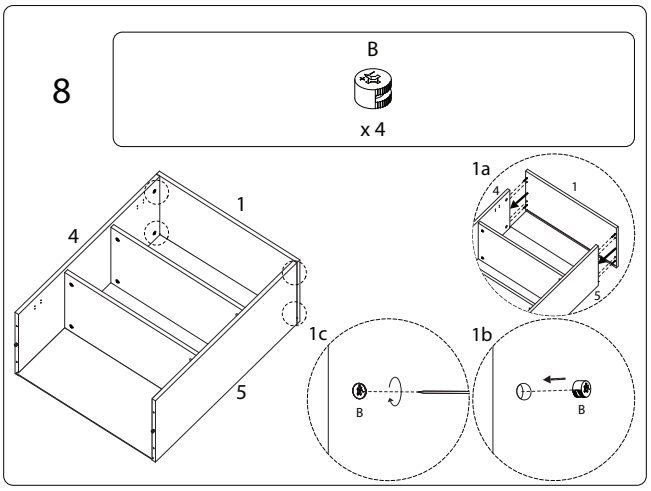

9

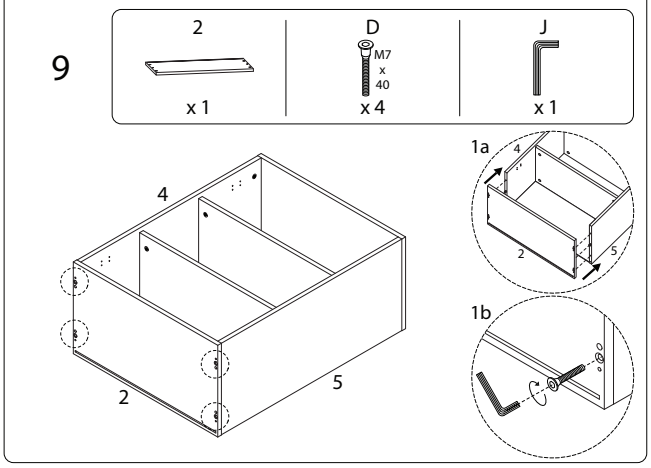

10

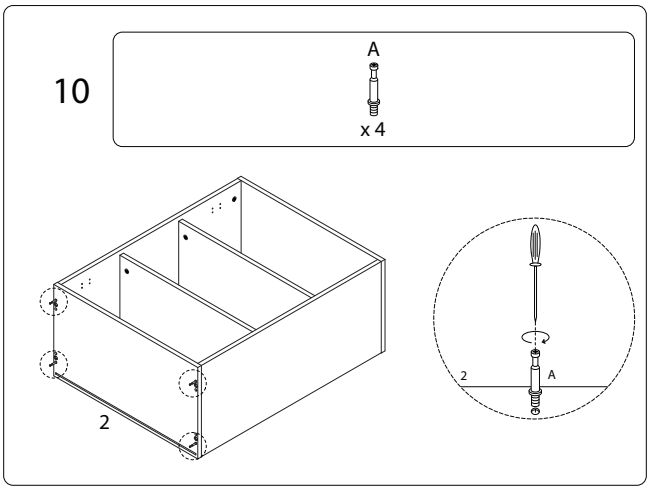

11

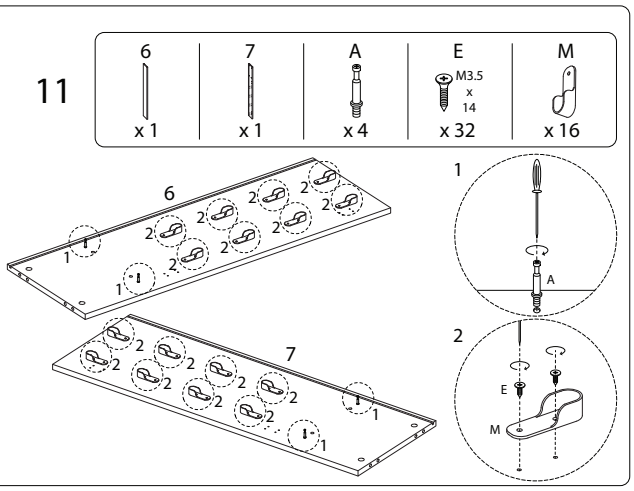

12

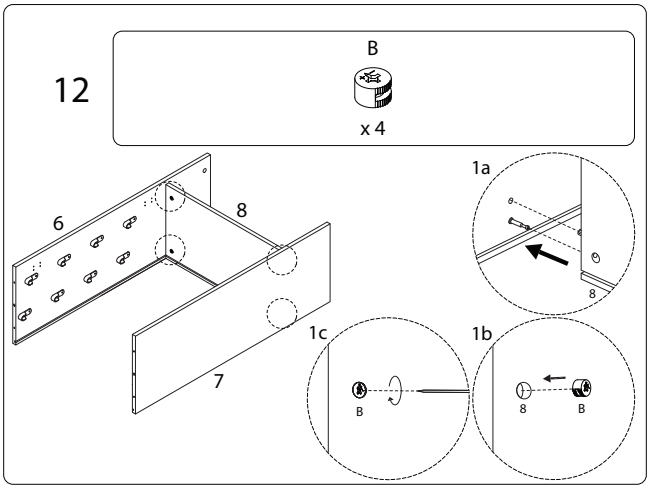

13

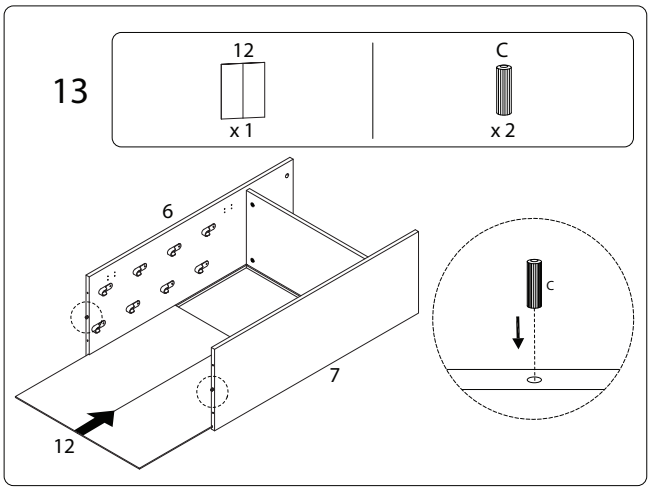

14

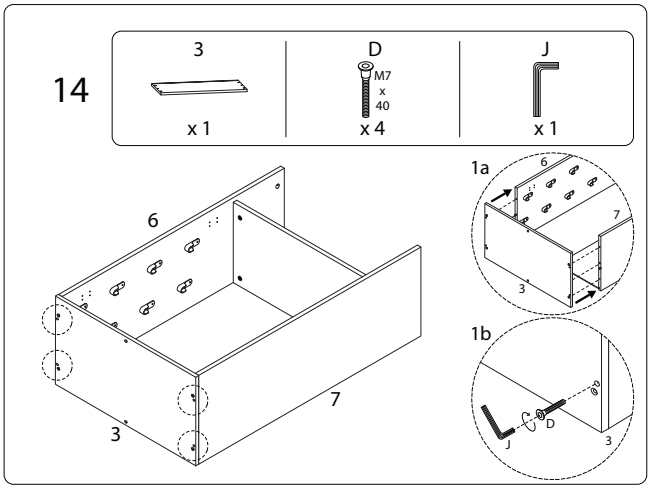

15

11	C
x 1	x 4

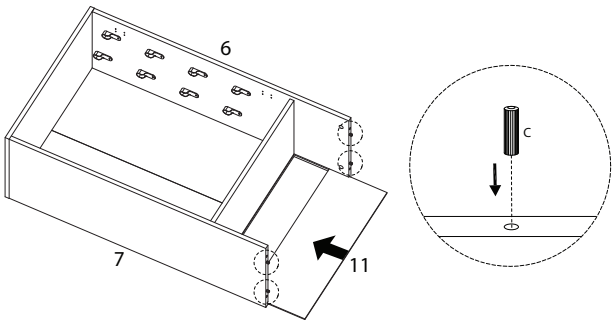

16

B
x 4

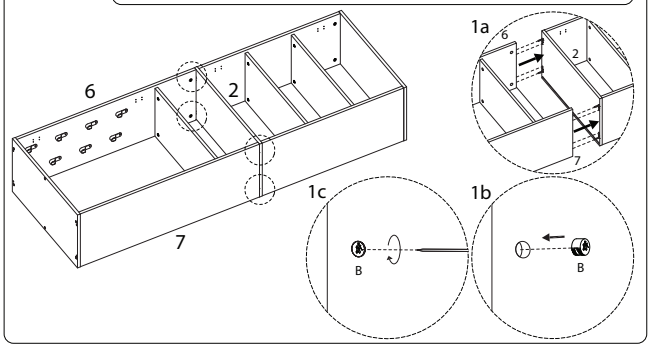

17

15	16	F	J
x 2	x 2	M6 x 40 x 4	x 1

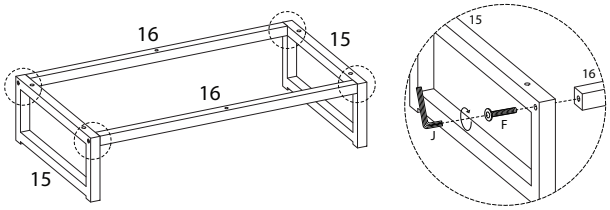

18

G	J
M6 x 30 x 6	x 1

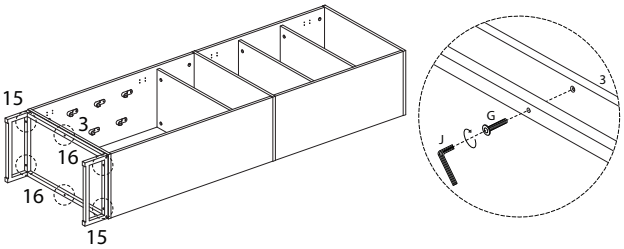

19 x 2

13	14	H	N
x 1	x 1	x 2	M4 x 18 x 4

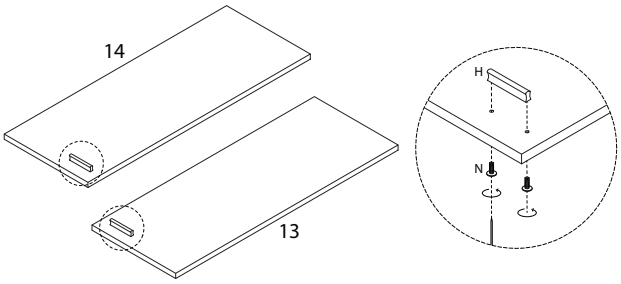

20 x 2

E	K
M3.5 x 14 x 8	x 4

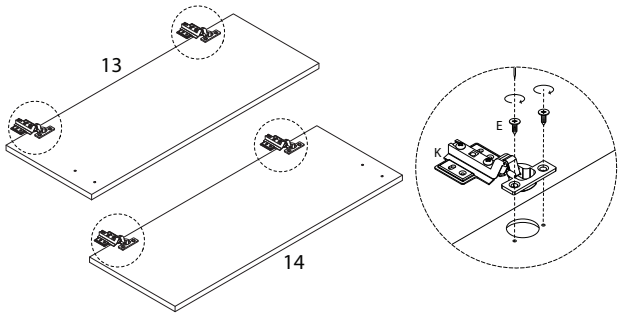

21

E
M3.5 x 14 x 32

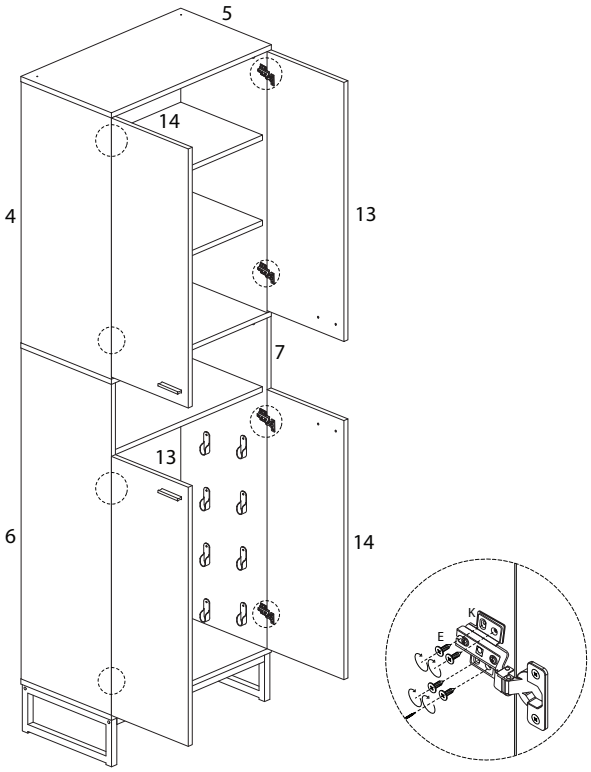

!

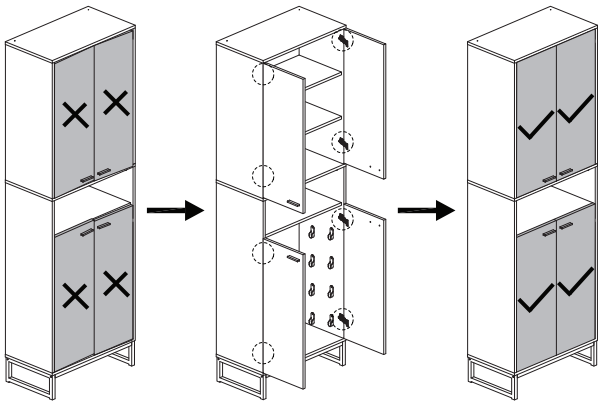

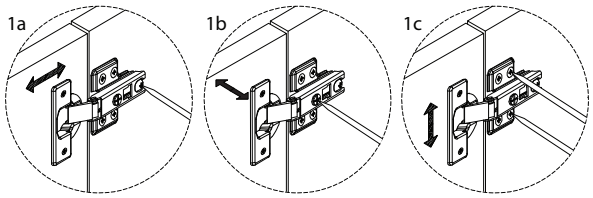

22

17
x 8

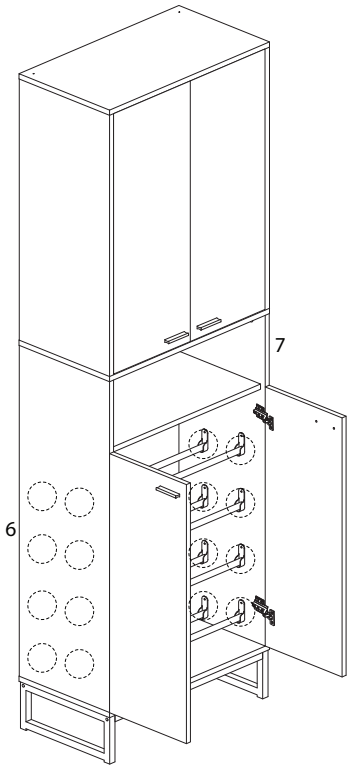

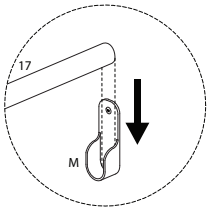

23

I1	I2
M3.5 x 14	
x 20	x 20

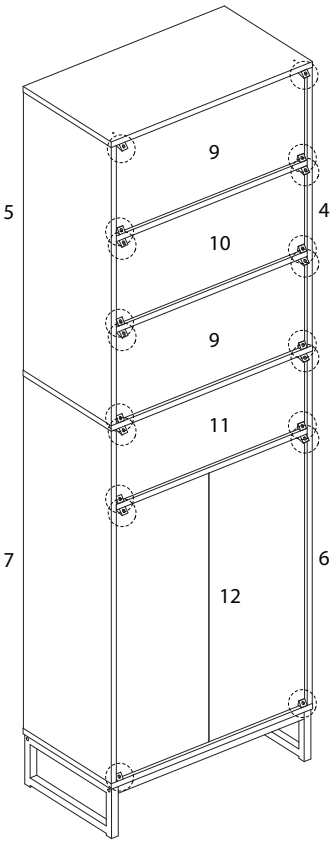

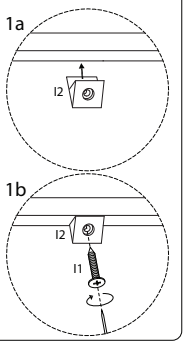

24
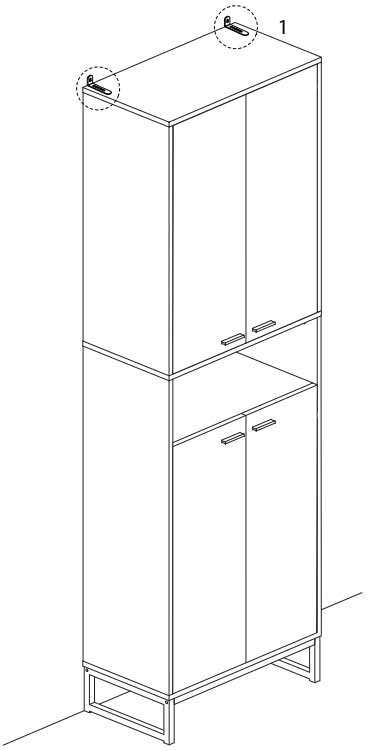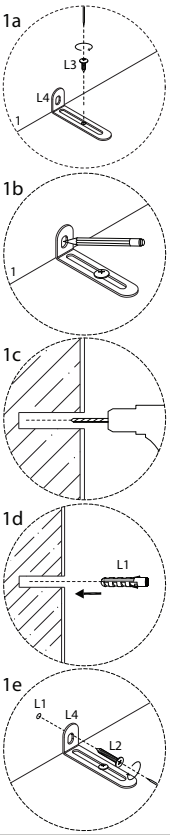
L1	L2	L3	L4
	M4 x 35	M3.5 x 12	
x 2	x 2	x 2	x 4