RANCHERIA

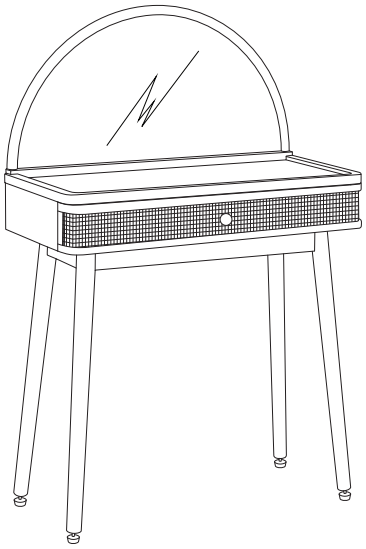

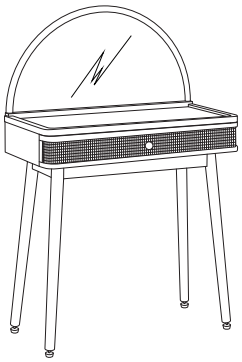

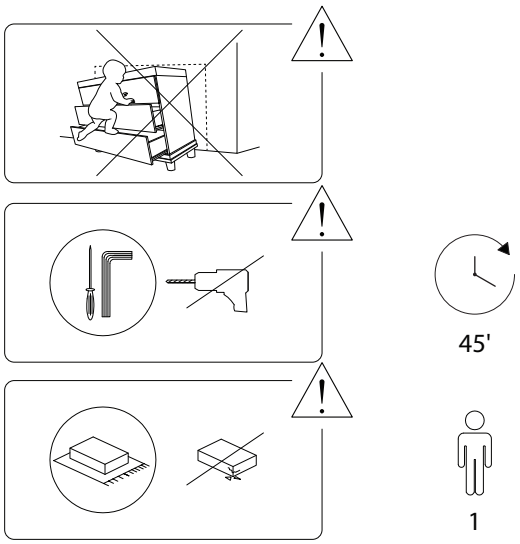
45'
1

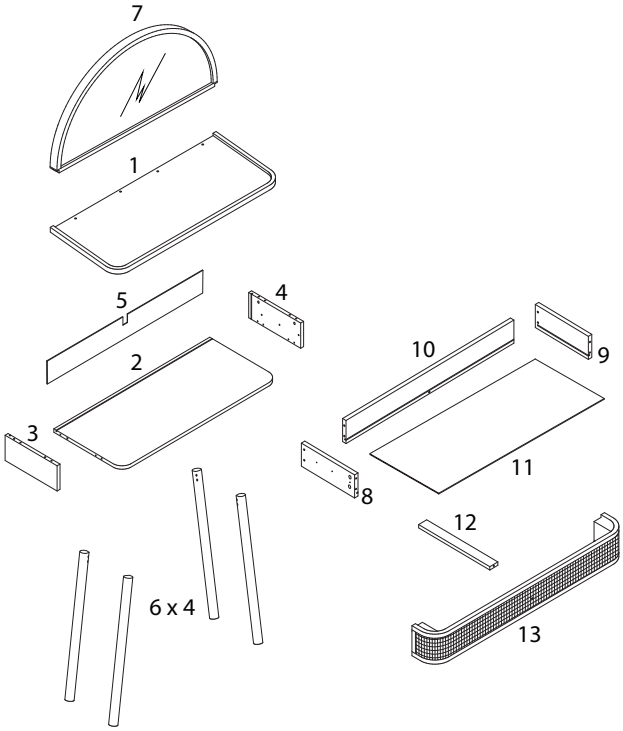
7
1
5
4
2
3
10
9
11
8
12
6 x 4
13

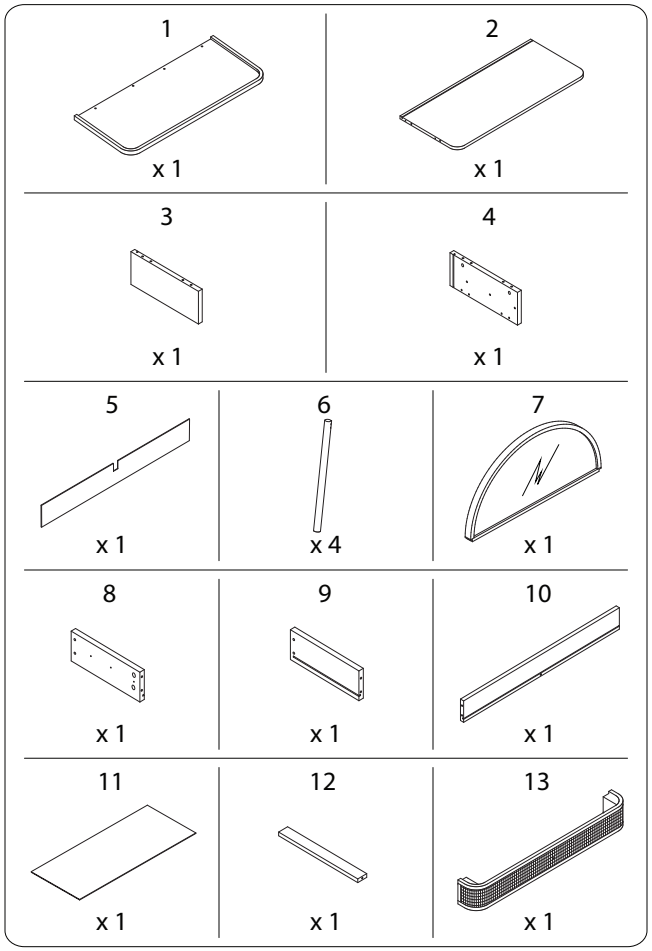
1
x 1
2
x 1
3
x 1
4
x 1
5
x 1
6
x 4
7
x 1
8
x 1
9
x 1
10
x 1
11
x 1
12
x 1
13
x 1

A	B	C	D
x 13	x 13	x 8	M3.5 x 12 x 12
E	**F**	**G**	**H_1**
x 4	M6 x 45 x 8	M6 x 20 x 4	x 2
H_2	**I_1**	**I_2**	**J**
x 2	M3 x 14 x 4	x 4	M4 x 30 x 5
K	**L**	**M_1**	**M_2**
M4 x 30 x 1	x 1	x 1	M4 x 40 x 1

M_3	M_4	N	O_1	O_2
M4 x 12 x 2	x 1	x 1	x 8	x 8

!

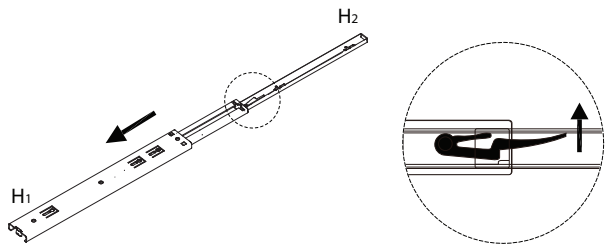

1

3	4	D	H_1
x 1	x 1	M3.5 x 12 x 6	x 1

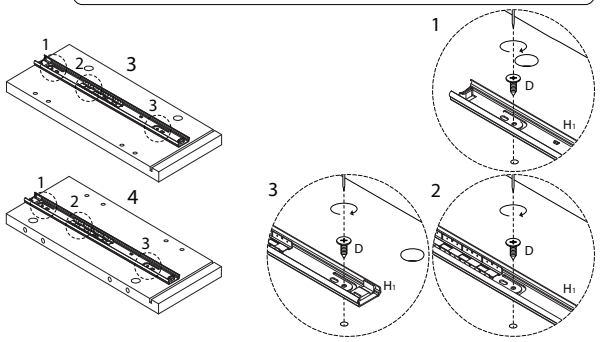

2

A
x 4

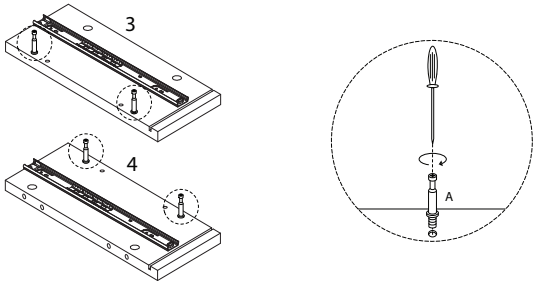

4

B
x 4

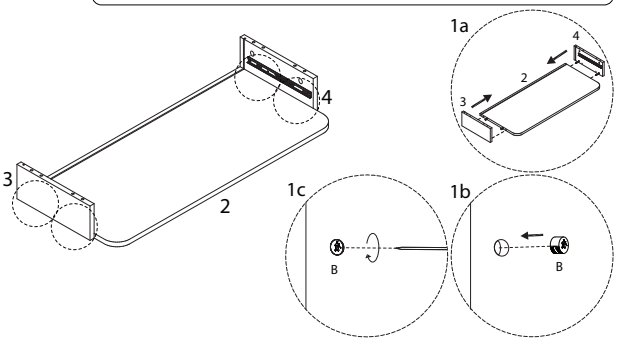

3

2	C
x 1	x 4

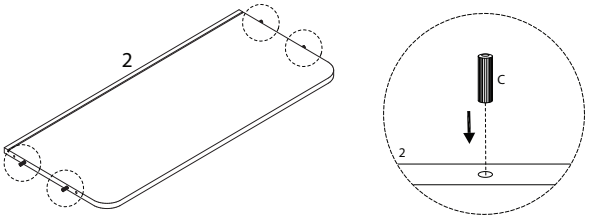

5

C
x 4

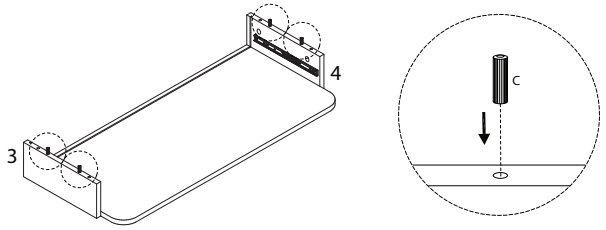

6

7

8

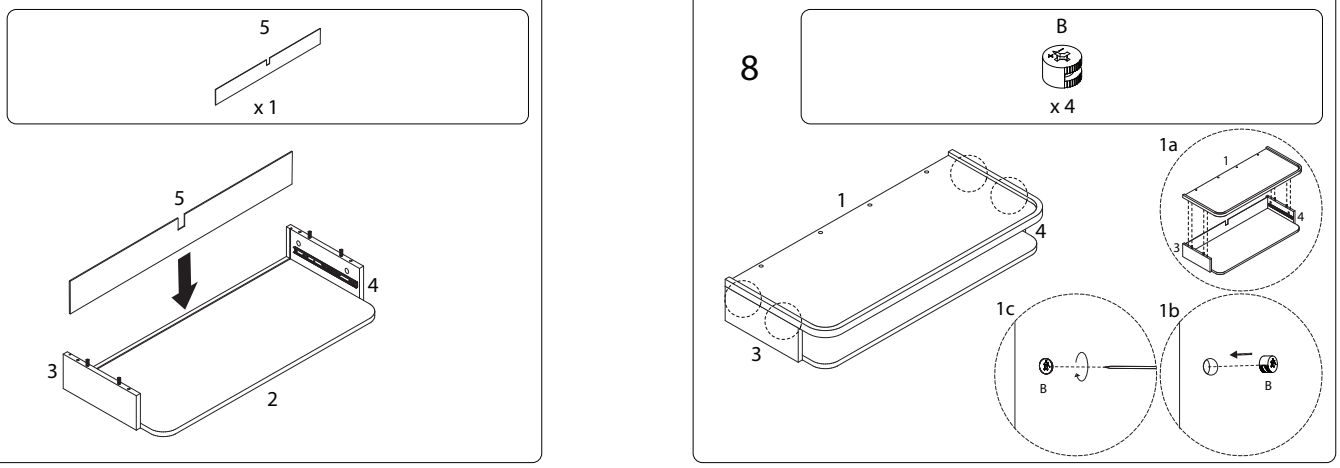

9 x 4

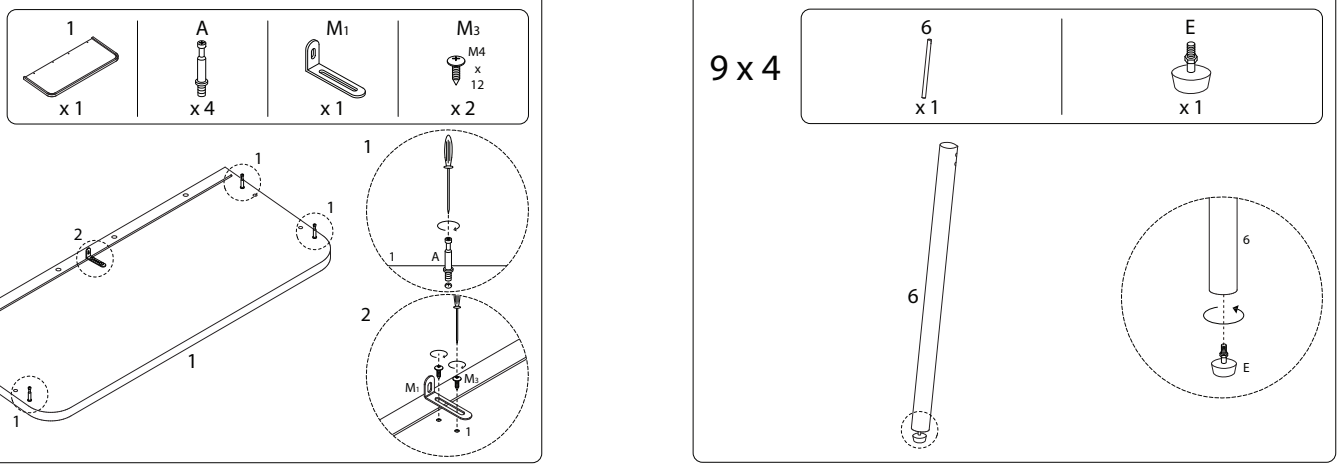

10

11

12

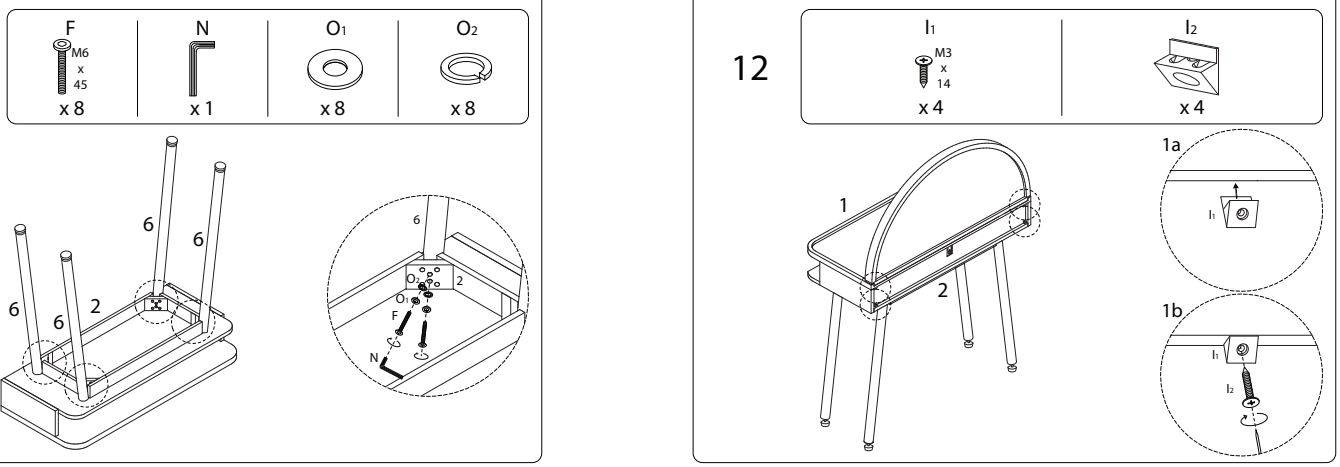

13

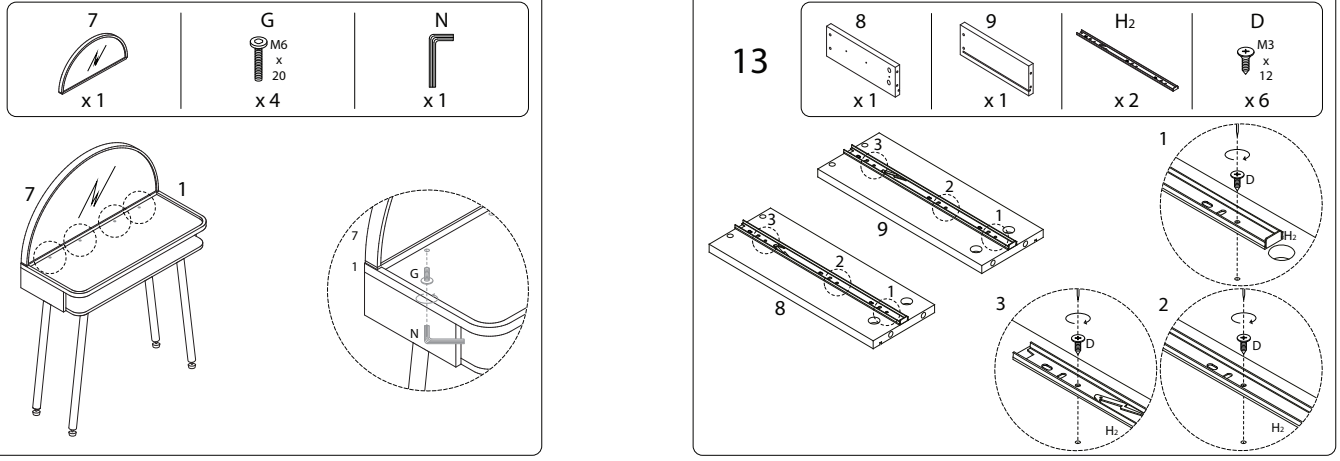

14

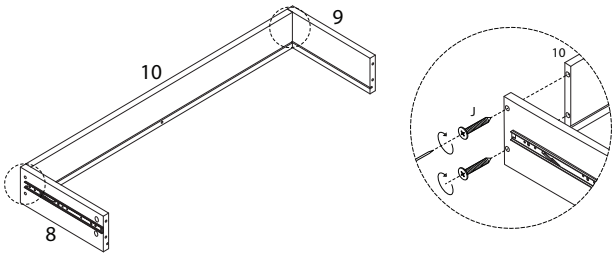

15

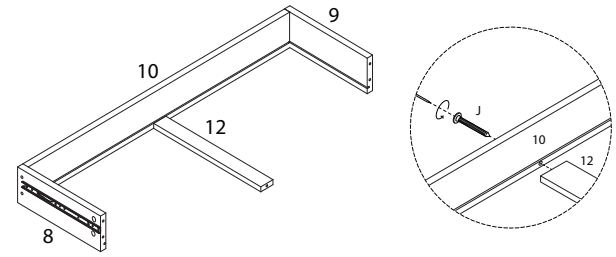

16

17

18

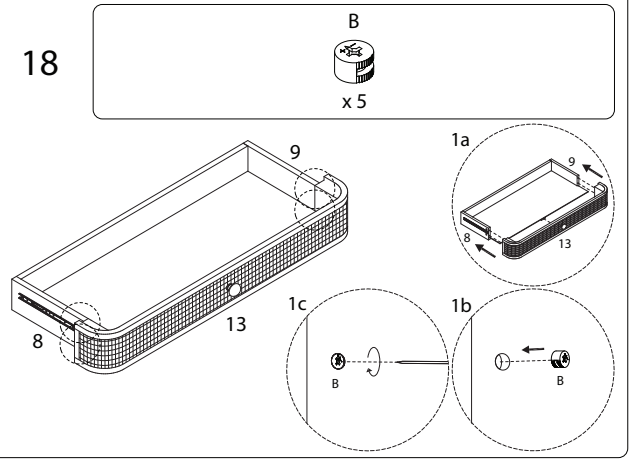

19

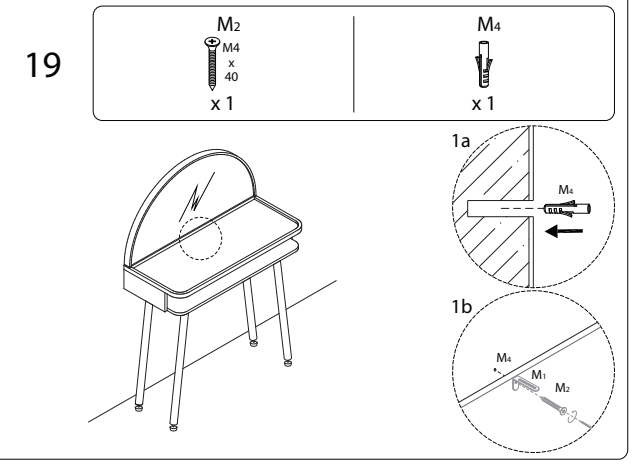

20