# BAWLEY

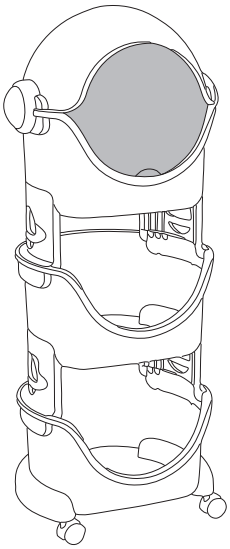



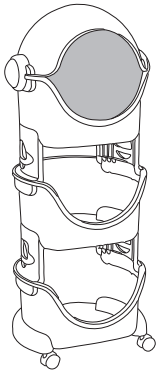

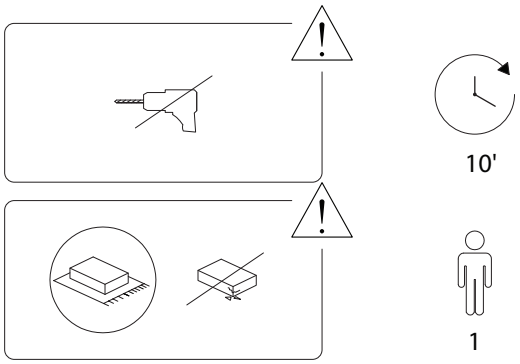






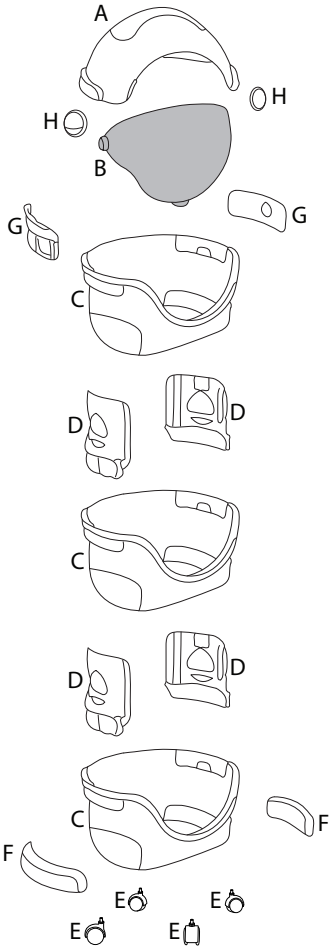






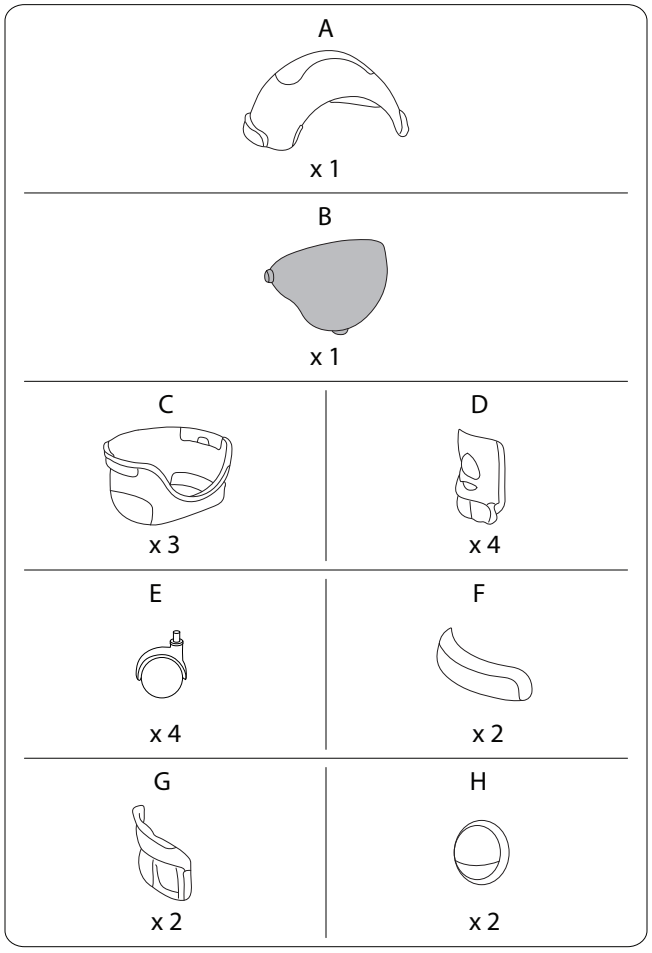

1

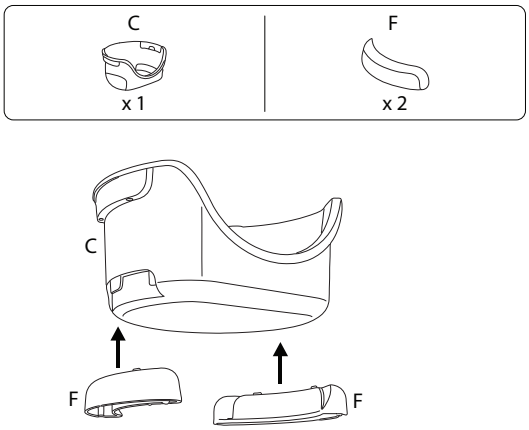
C
x 1
F
x 2
C
F
F

2

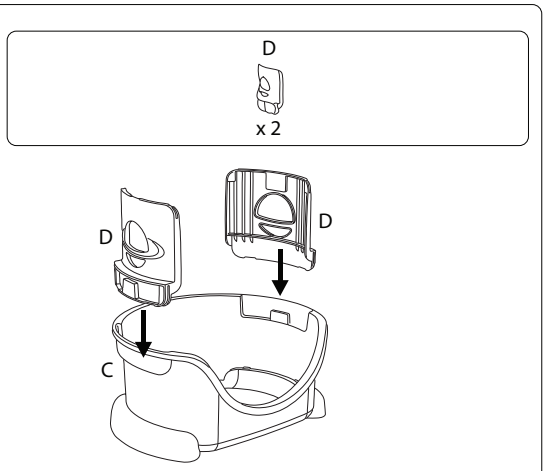
D
x 2
D
D
C





3

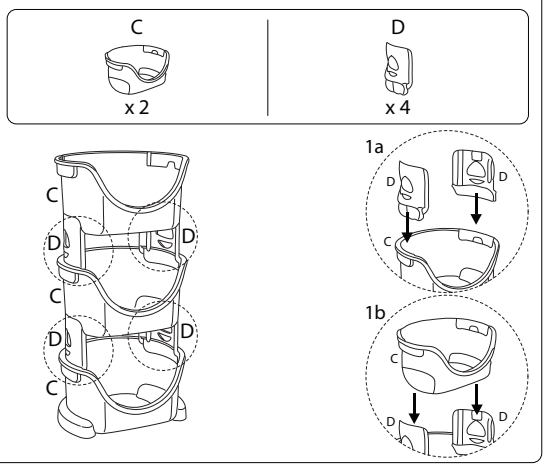
C
x 2
D
x 4
C
D
C
D
C
D
D
D
1a
D
D
C
1b
C
D
D

4

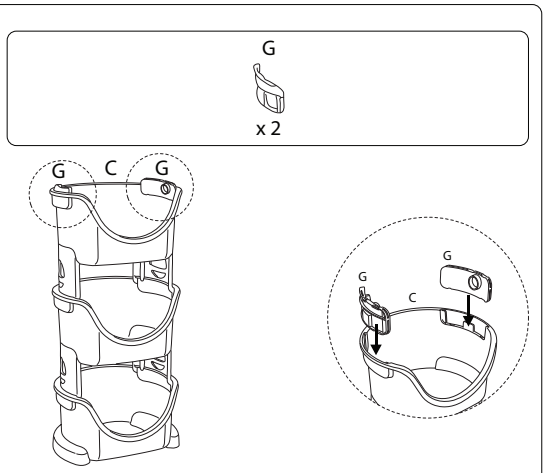
G
x 2
G
C
G
G
G
C





5

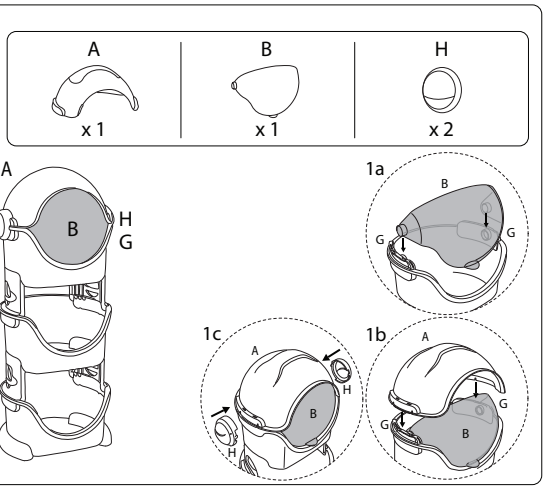
A
x 1
B
x 1
H
x 2
A
H
G
B
H
G
1a
B
G
G
1c
A
H
B
H
1b
A
G
G
B

6

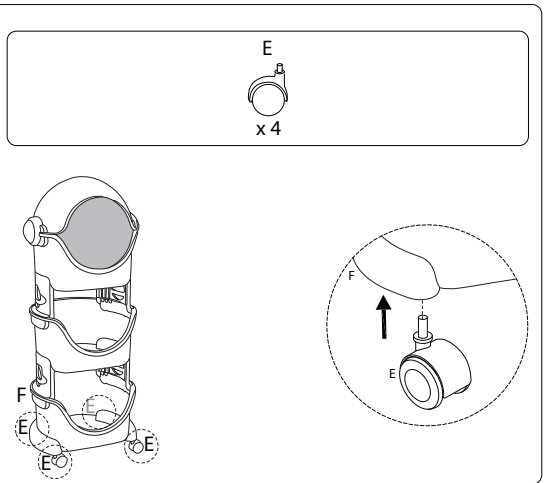
E
x 4
F
E
E
E
F
E