CARLET

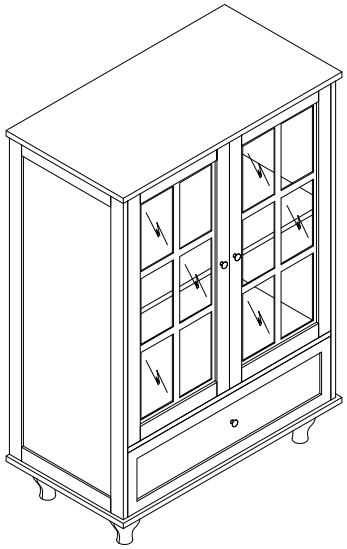

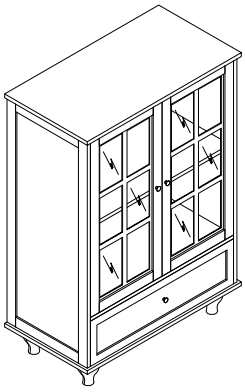

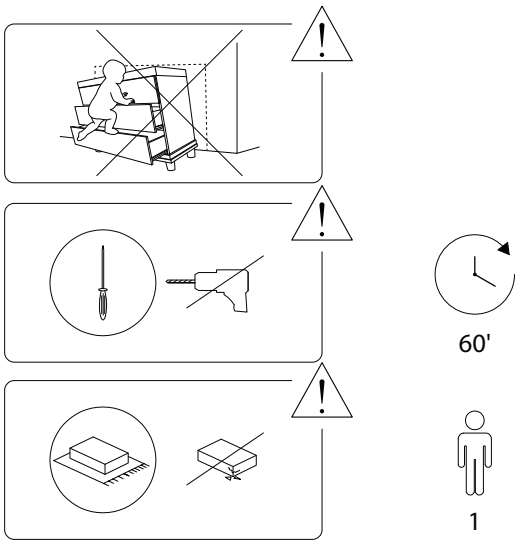
60'
1

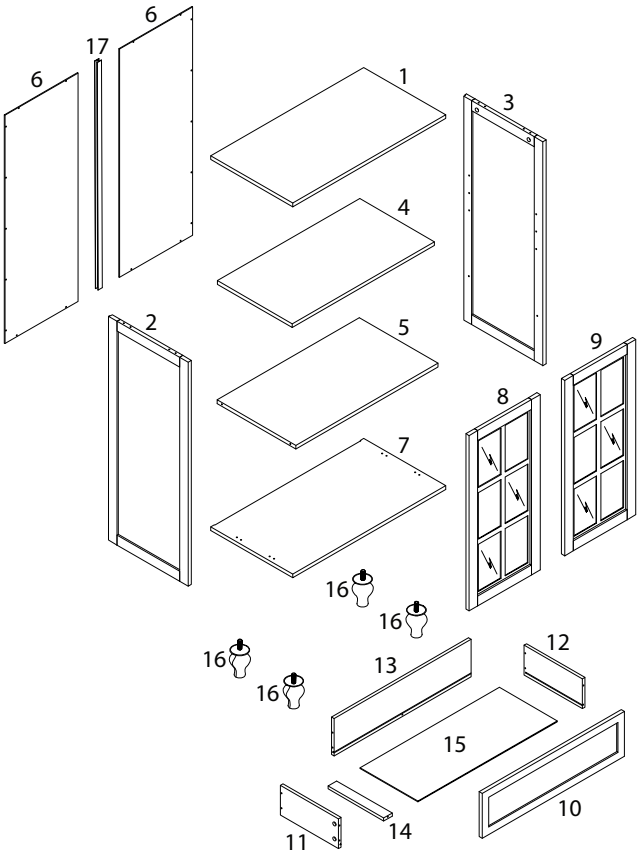
6
17
6
1
3
4
2
5
9
8
7
16
16
16
16
12
13
15
10
14
11

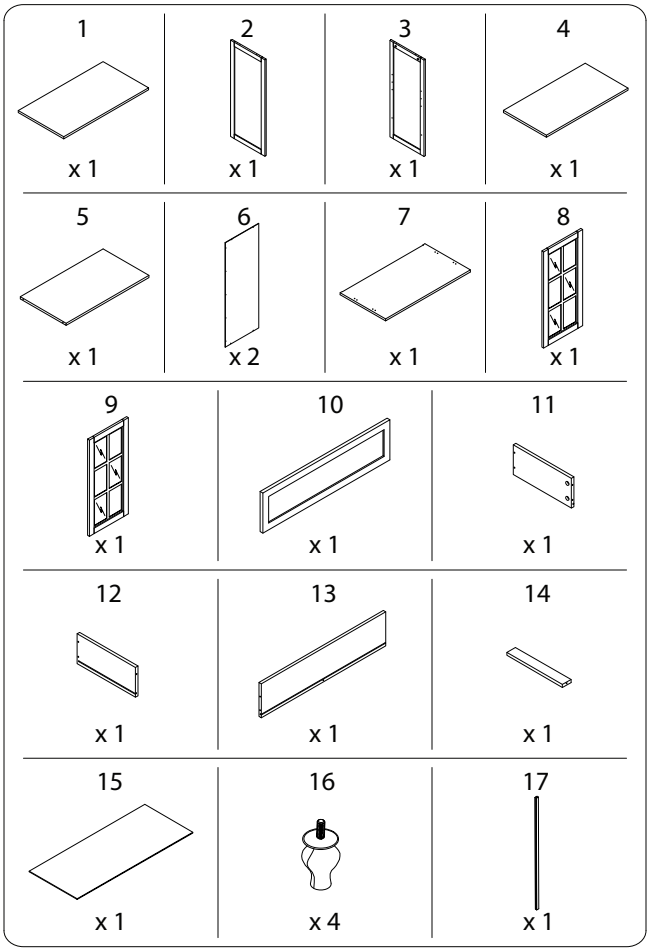
1
x 1
2
x 1
3
x 1
4
x 1
5
x 1
6
x 2
7
x 1
8
x 1
9
x 1
10
x 1
11
x 1
12
x 1
13
x 1
14
x 1
15
x 1
16
x 4
17
x 1

A	B	C	D
x 13	x 13	x 8	M4 x 35 x 11
E	**F**	**G**	**H**
M2.5 x 10 x 18	M4 x 12 x 20	x 4	x 2
I	**J**	**K**	**L1**
M4 x 18 x 3	x 3	x 4	x 1
L2	**M**	**N**	
M3 x 14 x 2	x 2	x 2	
O	**P**	**Q**	
x 4	M4 x 12 x 2	x 2	

1

2	3	B
x 1	x 1	x 4

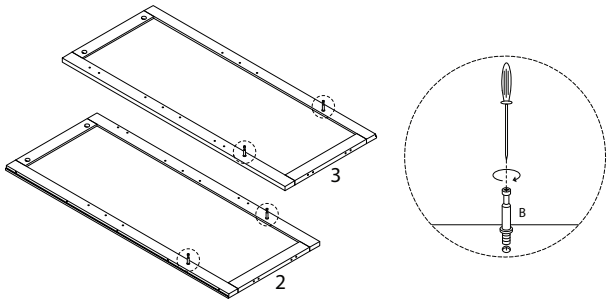

2

A
x 4

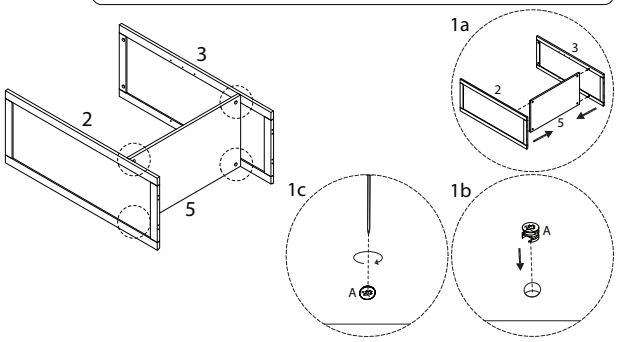

3

C
x 8

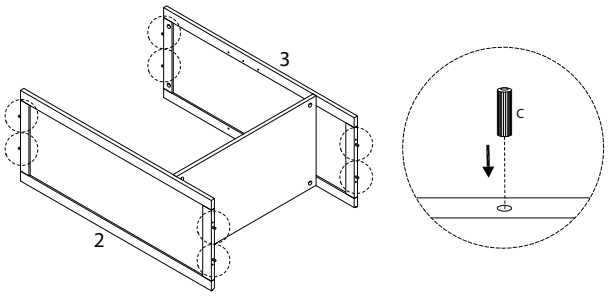

4

7	F	M
x 1	M4 x 12 x 2	x 2

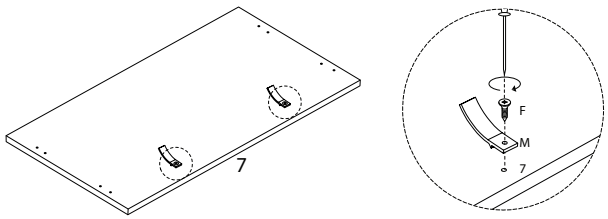

5

D
M4 x 35 x 4

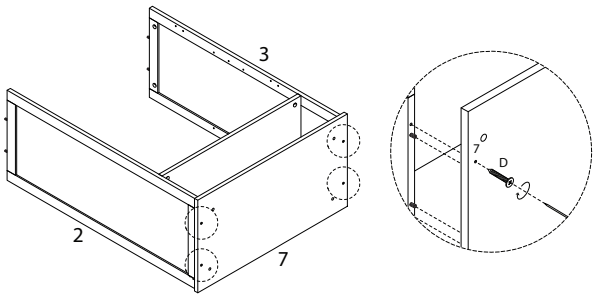

6

16
x 4

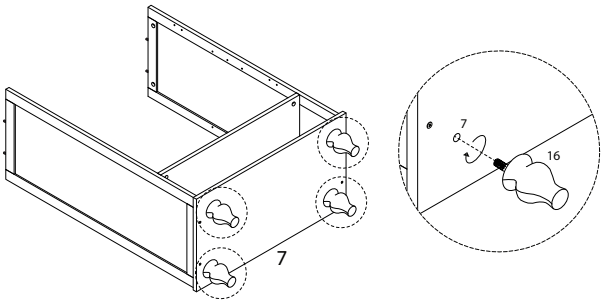

7

1	B
x 1	x 4

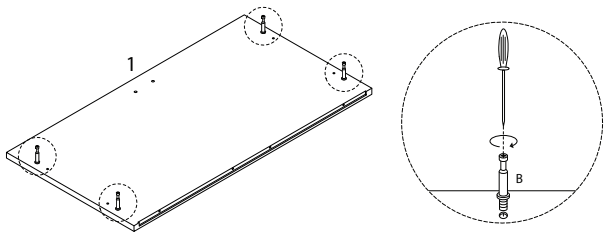

8

L_1	L_2
x 1	M3 x 14 x 2

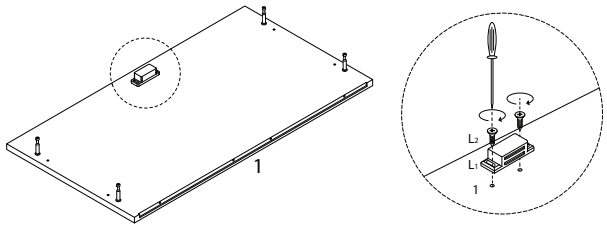

9

A
x 4

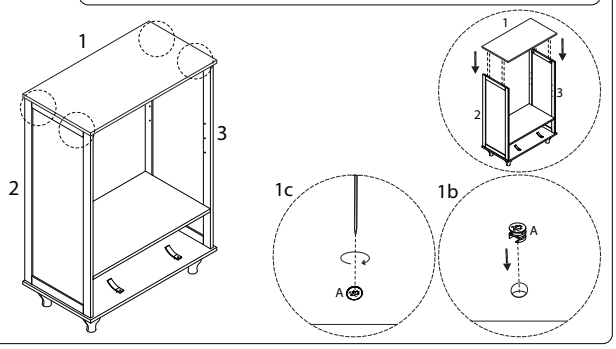

10

6	17	E
x 2	x 1	M2.5 x 10 x 18

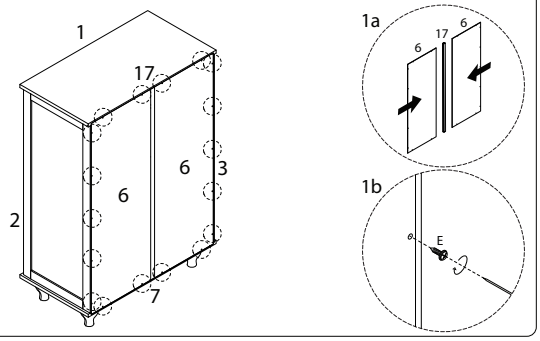

11

8	9	F	G	H
x 1	x 1	M4 x 12 x 10	x 4	x 2

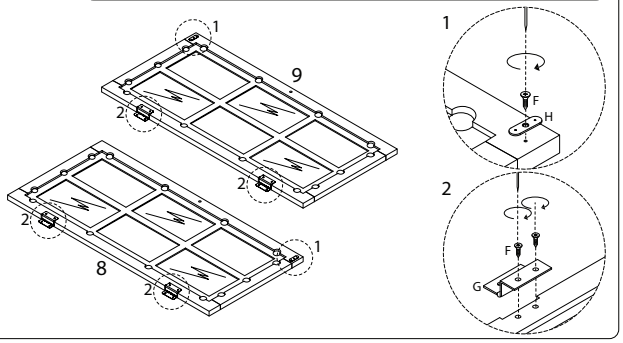

12

I	J
M4 x 18 x 2	x 2

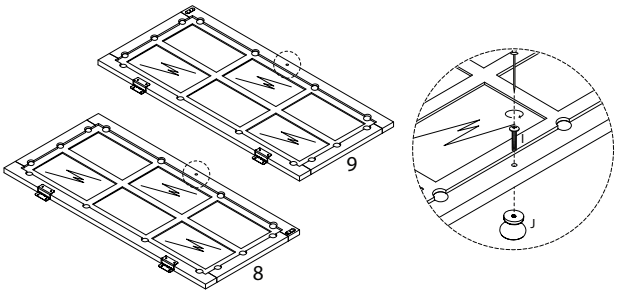

13

F
M4 x 12 x 8

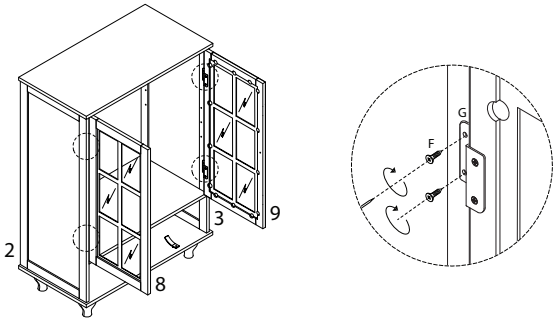

14

4	K
x 1	x 4

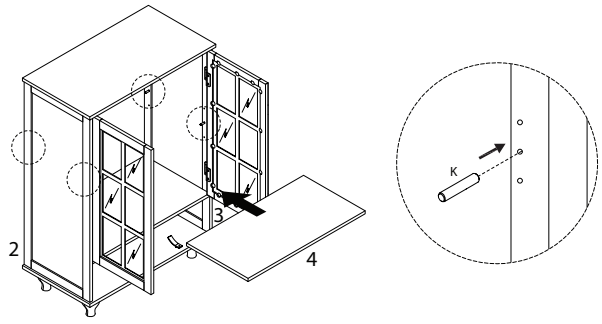

15

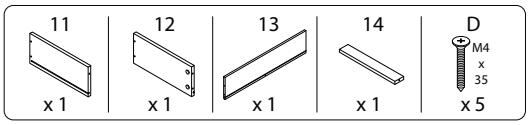

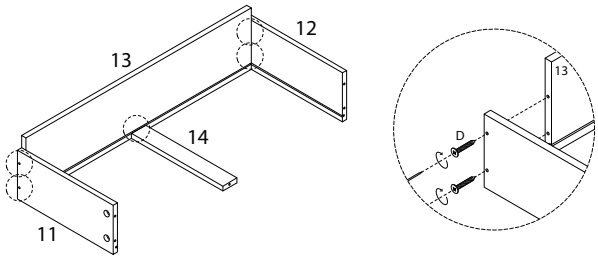

16

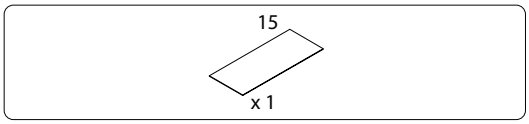

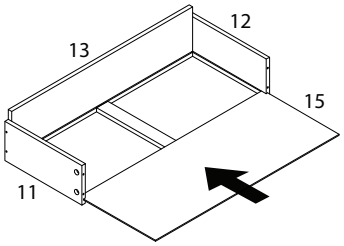

17

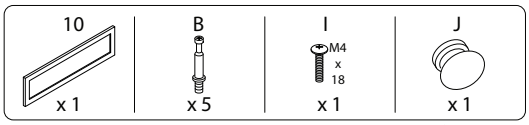

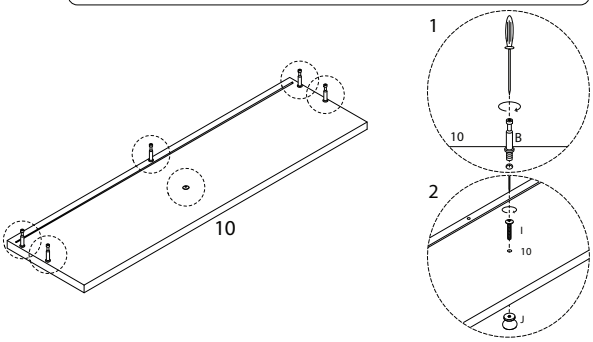

18

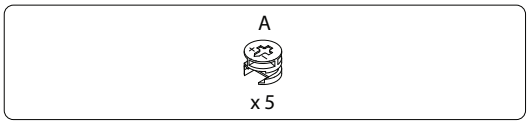

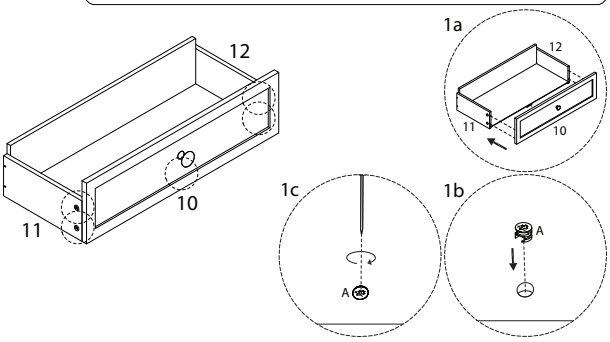

19

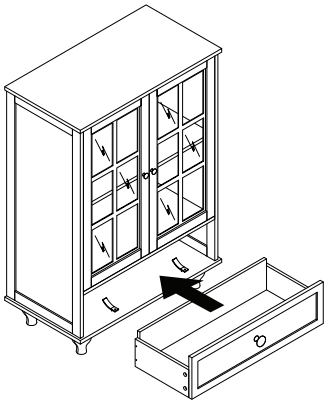

20

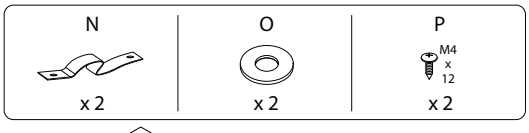

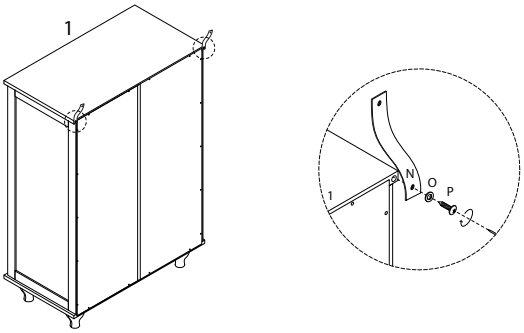
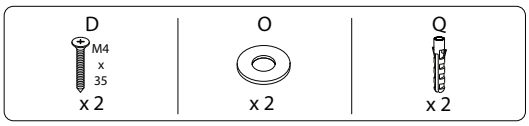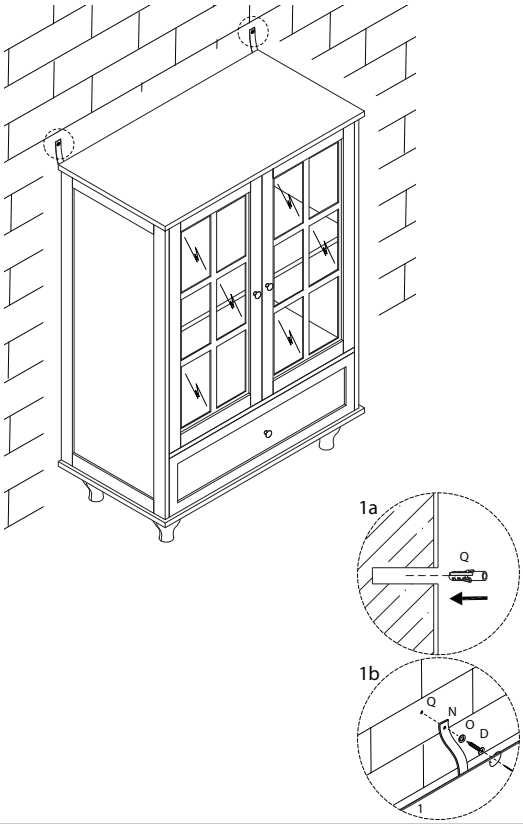
21