ADELAIDE

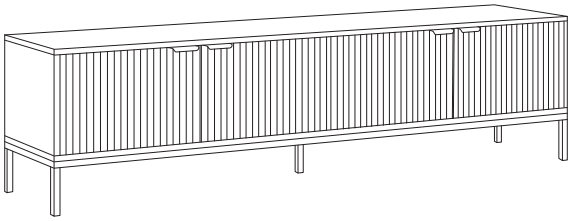

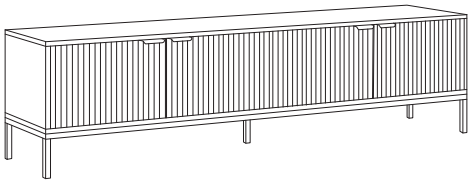

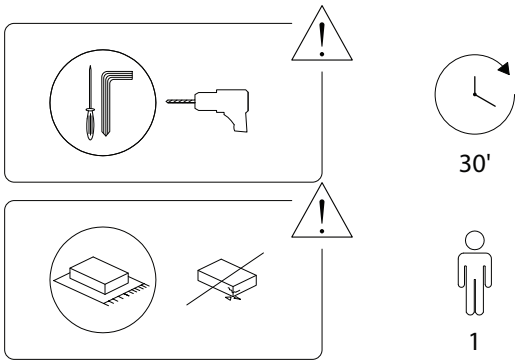
30'
1

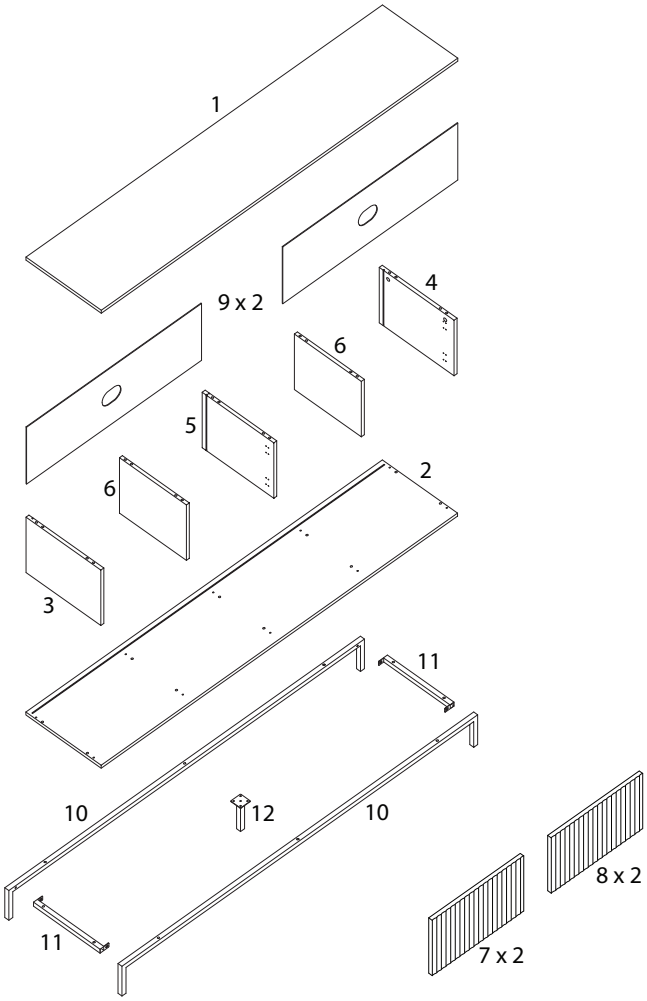
1
9 x 2
4
6
5
6
2
3
11
10
12
10
8 x 2
11
7 x 2

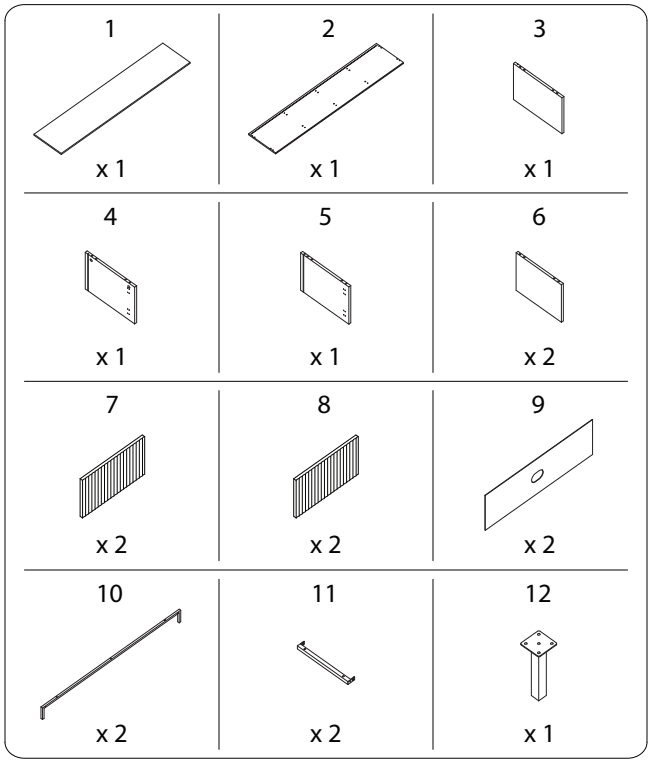
1
x 1
2
x 1
3
x 1
4
x 1
5
x 1
6
x 2
7
x 2
8
x 2
9
x 2
10
x 2
11
x 2
12
x 1

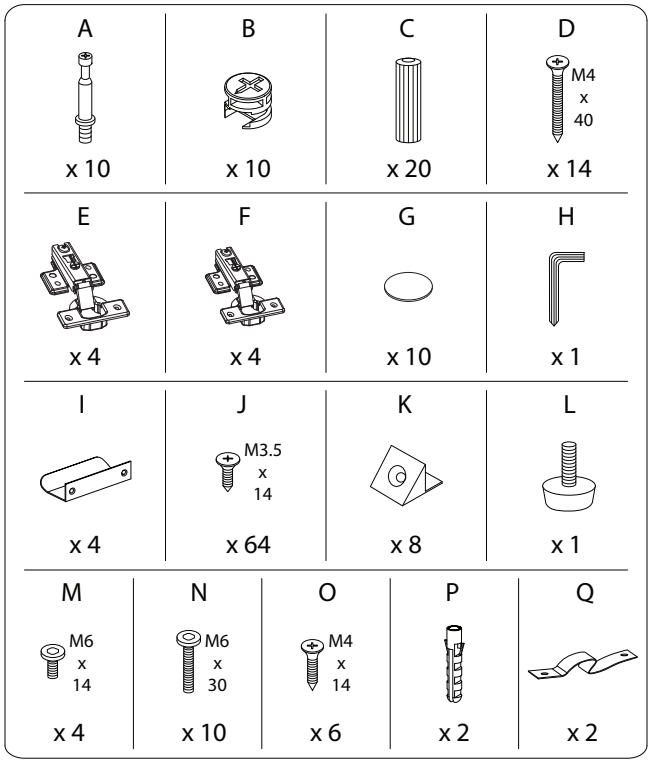
A
x 10
B
x 10
C
x 20
D
M4 x 40
x 14
E
x 4
F
x 4
G
x 10
H
x 1
I
x 4
J
M3.5 x 14
x 64
K
x 8
L
x 1
M
M6 x 14
x 4
N
M6 x 30
x 10
O
M4 x 14
x 6
P
x 2
Q
x 2

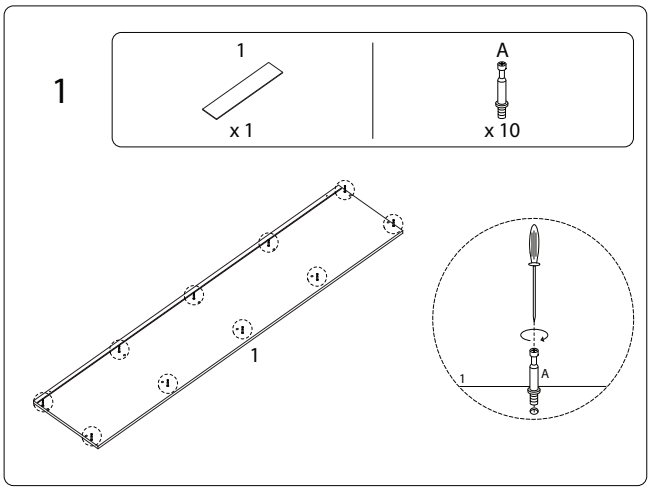
1
1
x 1
A
x 10
1
1
A

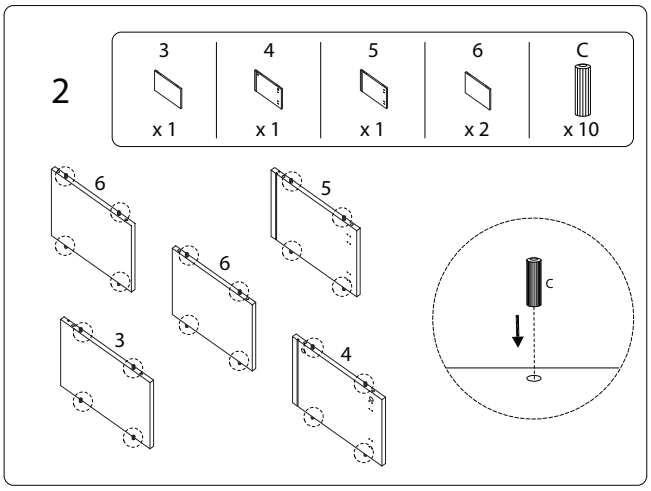
2
3
x 1
4
x 1
5
x 1
6
x 2
C
x 10
6
5
6
3
4
C

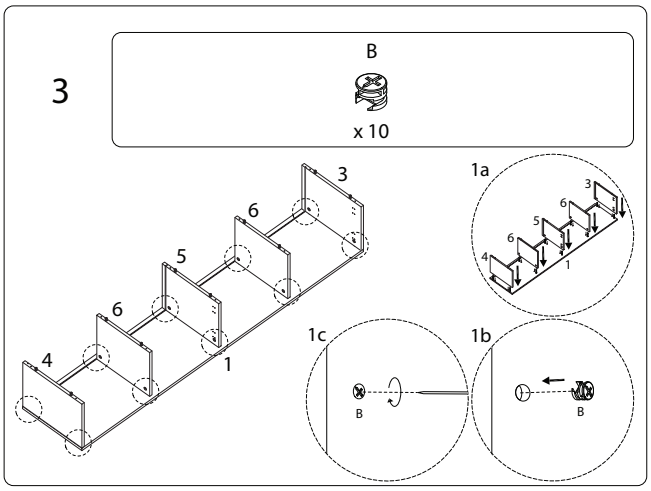
3
B
x 10
3
6
5
6
4
1
1a
3
6
5
6
4
1
1c
B
1b
B

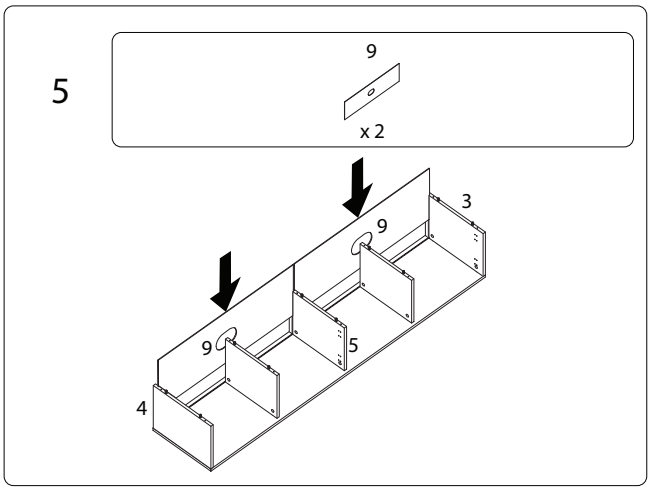
5
9
x 2
3
9
9
5
4

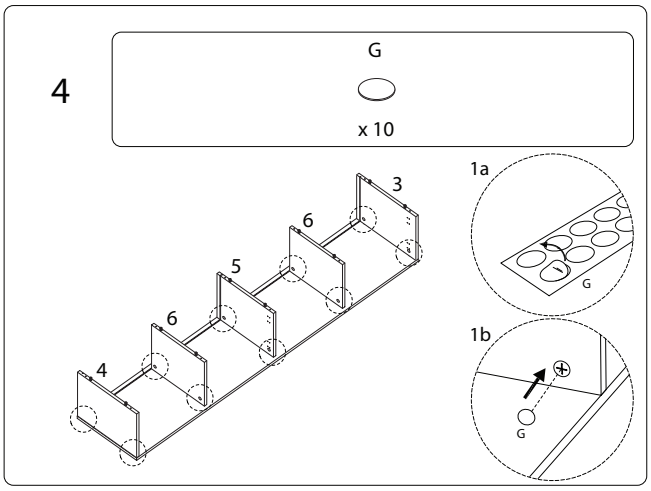
4
G
x 10
3
6
5
6
4
1a
G
1b
G

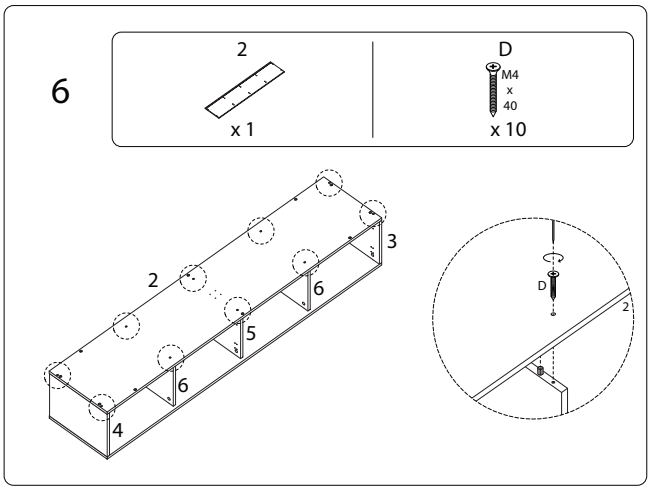
6
2
x 1
D
M4 x 40
x 10
3
2
6
5
6
4
D
2

7

10	11	H	M
x 2	x 2	x 1	M6 x 14 x 4

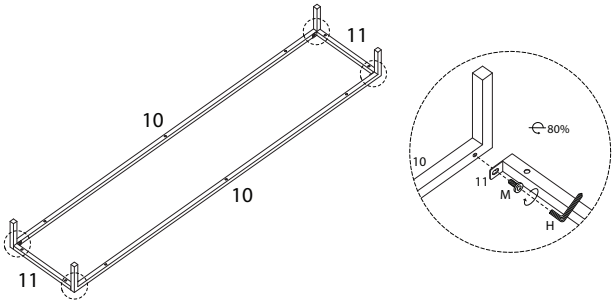

8

12	L
x 1	x 1

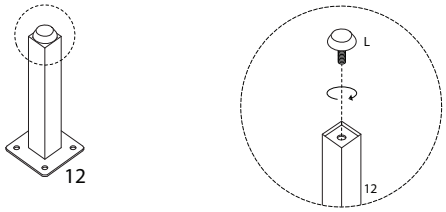

9

H	N	O
x 1	M6 x 30 x 10	M4 x 14 x 4

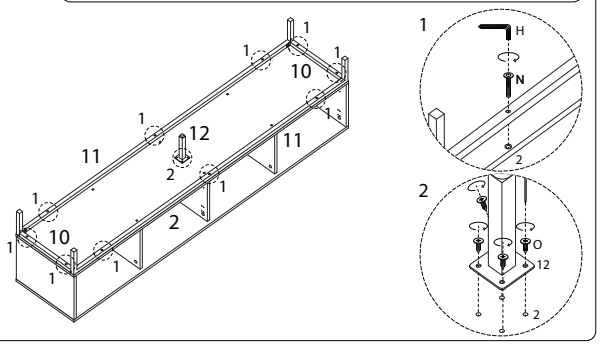

10

H
x 1

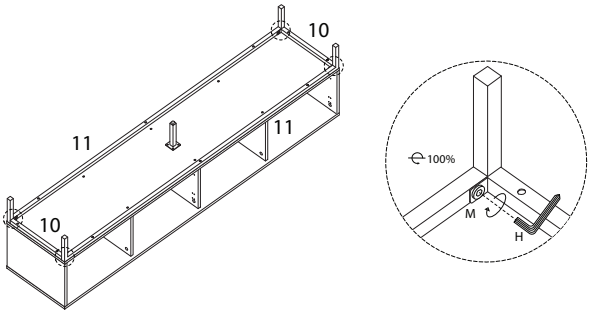

11

J	K
M3.5 x 14 x 8	x 1

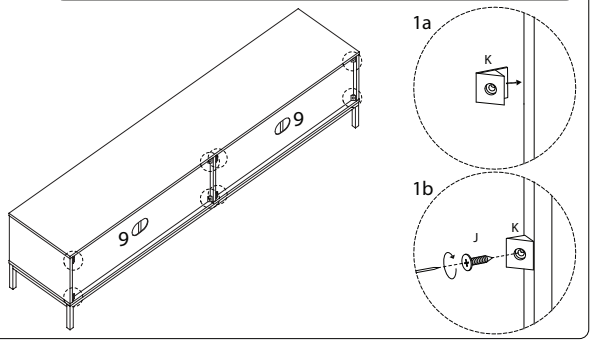

13

J
M3.5 x 14 x 16

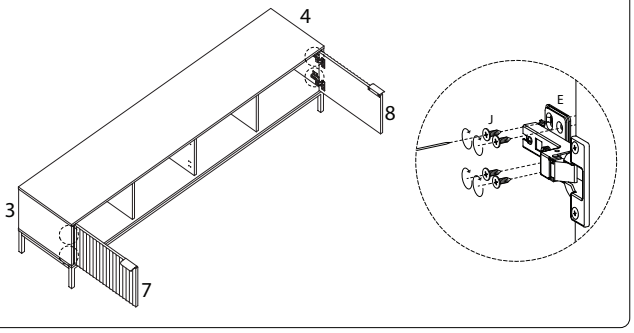

12

7	8	E	I	J
x 1	x 1	x 4	x 2	M3.5 x 14 x 12

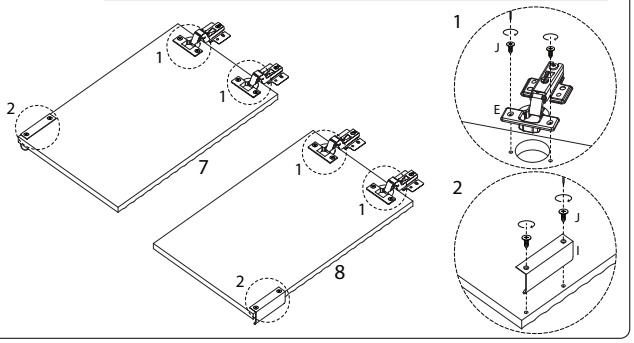

14

7	8	F	I	J
x 1	x 1	x 4	x 2	M3.5 x 14 x 12

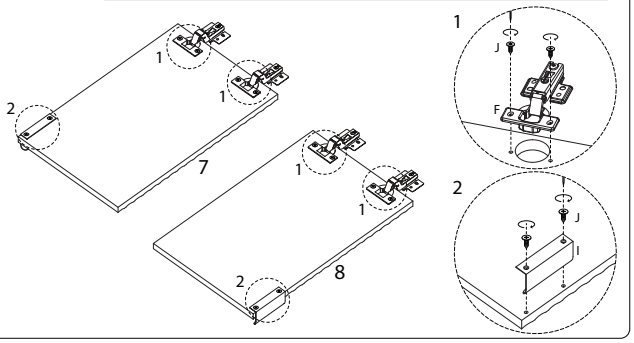

15

J

M3.5 x 14

x 16

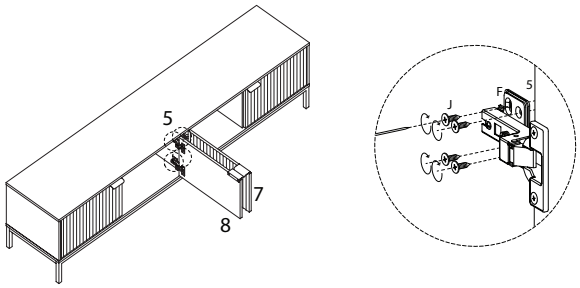

16

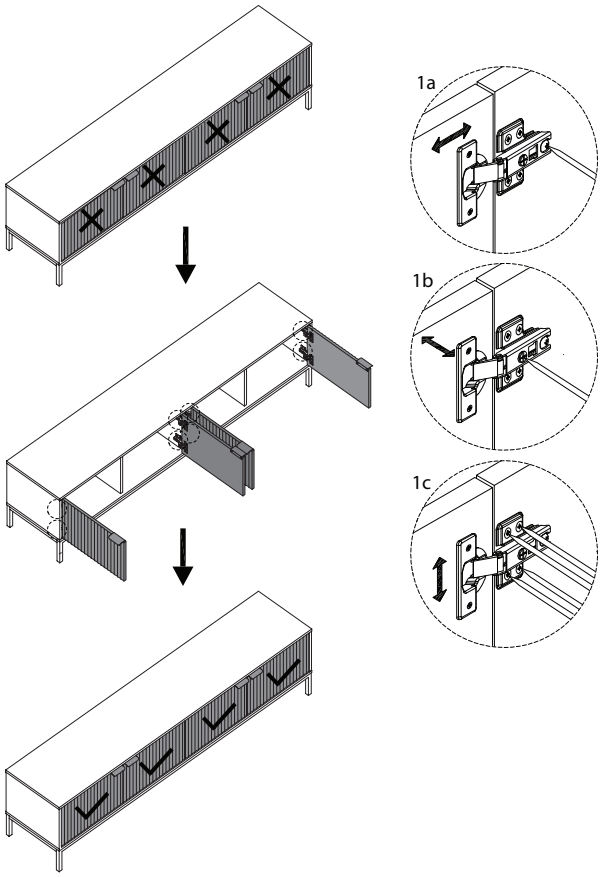

17

O	Q
M4 x 14	
x 2	x 2

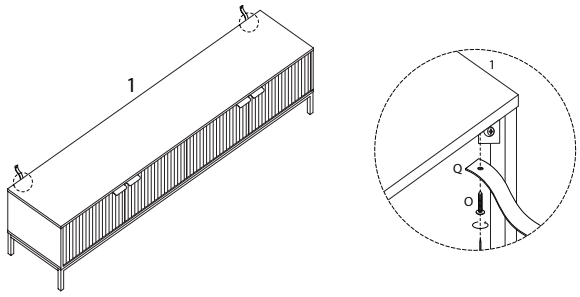

18
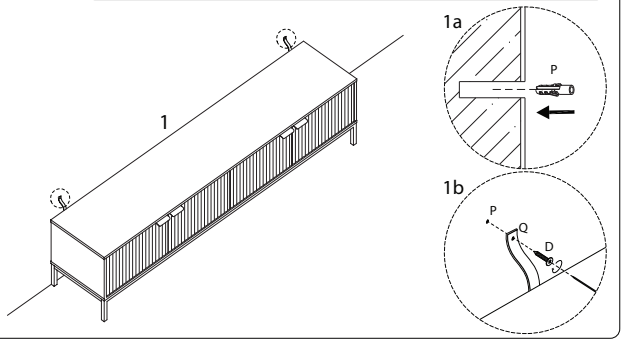
D	P
M4 x 40	
x 2	x 2