WALES

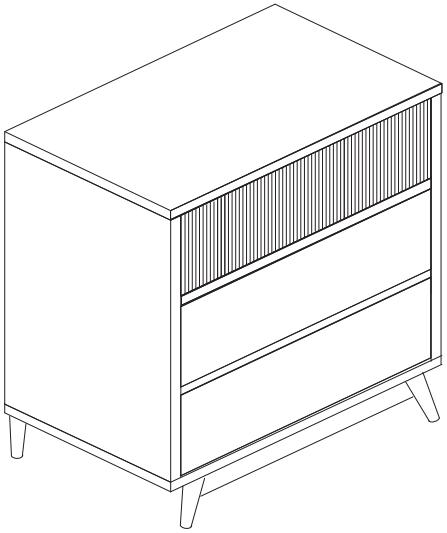

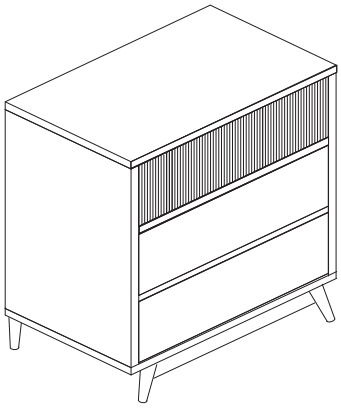

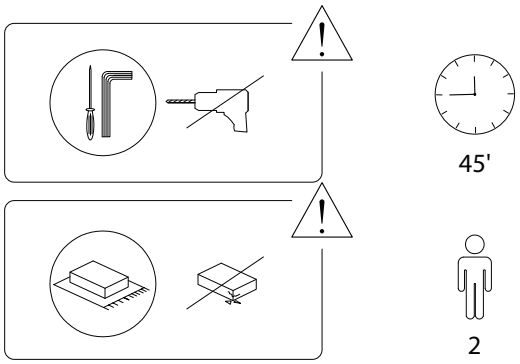
45'
2

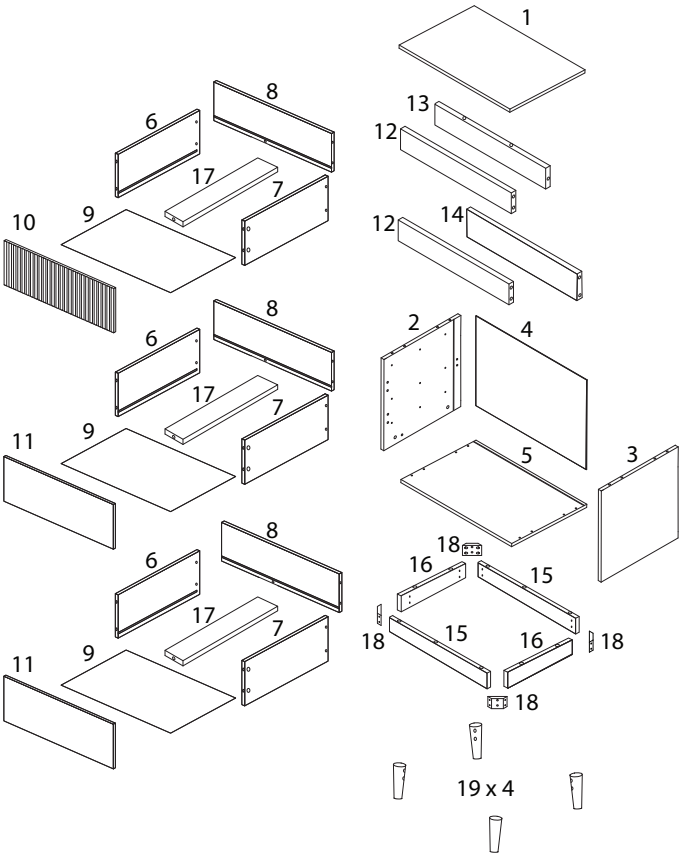
1
8
6
13
12
17
7
10
9
12
14
8
6
2
4
17
7
11
9
5
3
8
18
6
16
15
17
7
18
15
16
18
11
9
18
19 x 4

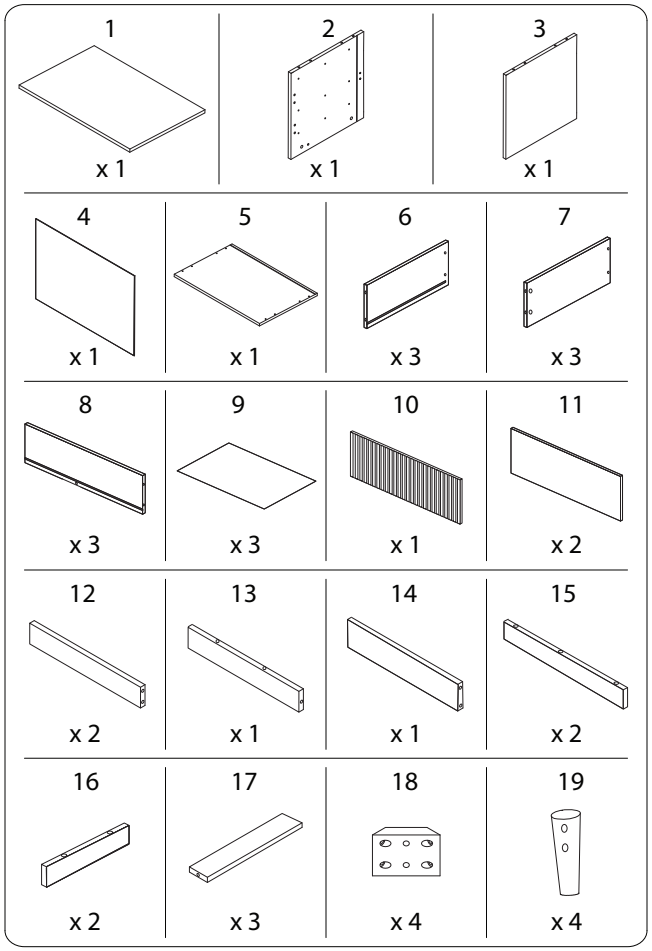
1
x 1
2
x 1
3
x 1
4
x 1
5
x 1
6
x 3
7
x 3
8
x 3
9
x 3
10
x 1
11
x 2
12
x 2
13
x 1
14
x 1
15
x 2
16
x 2
17
x 3
18
x 4
19
x 4

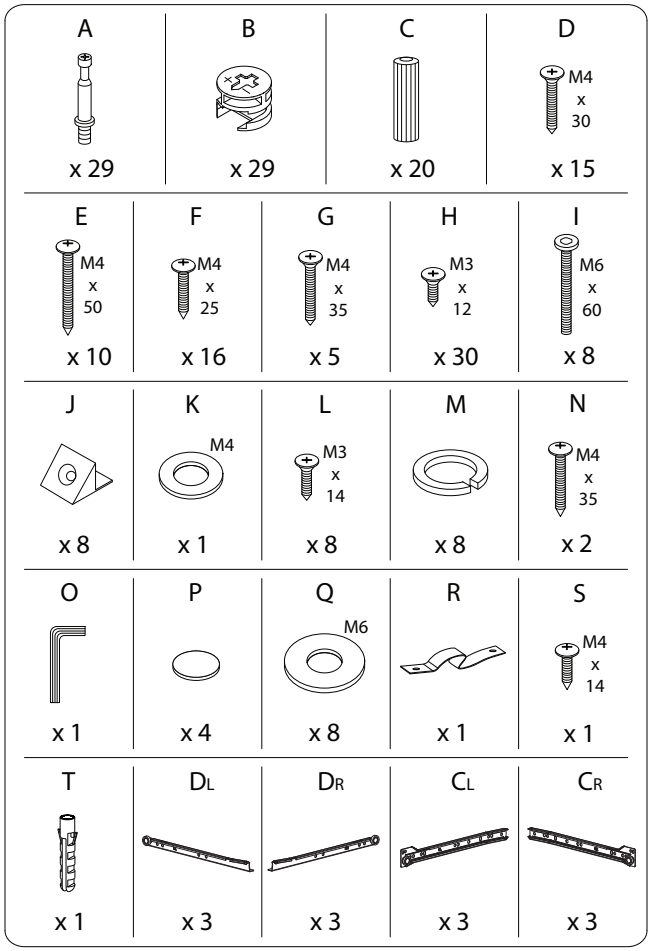
A
x 29
B
x 29
C
x 20
D
M4 x 30
x 15
E
M4 x 50
x 10
F
M4 x 25
x 16
G
M4 x 35
x 5
H
M3 x 12
x 30
I
M6 x 60
x 8
J
x 8
K
M4
x 1
L
M3 x 14
x 8
M
x 8
N
M4 x 35
x 2
O
x 1
P
x 4
Q
M6
x 8
R
x 1
S
M4 x 14
x 1
T
x 1
DL
x 3
DR
x 3
CL
x 3
CR
x 3

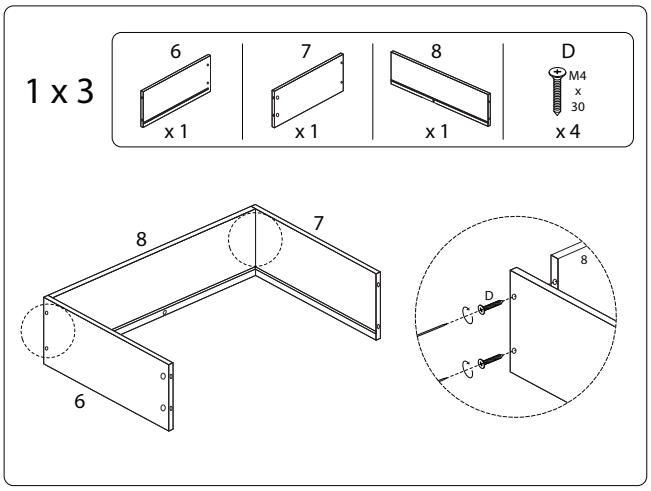
1 x 3
6
x 1
7
x 1
8
x 1
D
M4 x 30
x 4
8
7
6
8
D

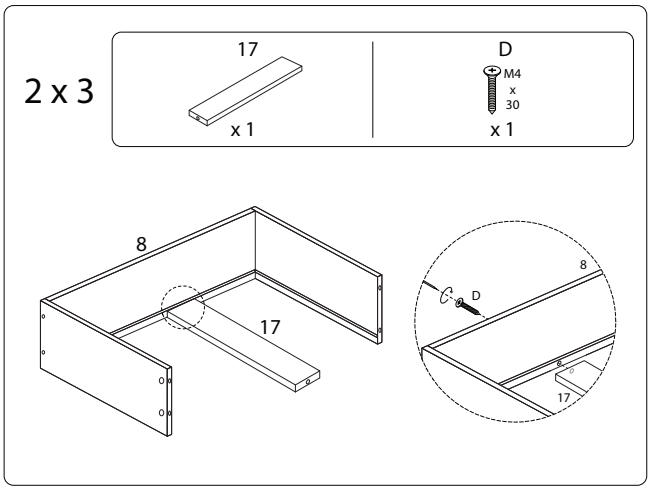
2 x 3
17
x 1
D
M4 x 30
x 1
8
17
8
D
17

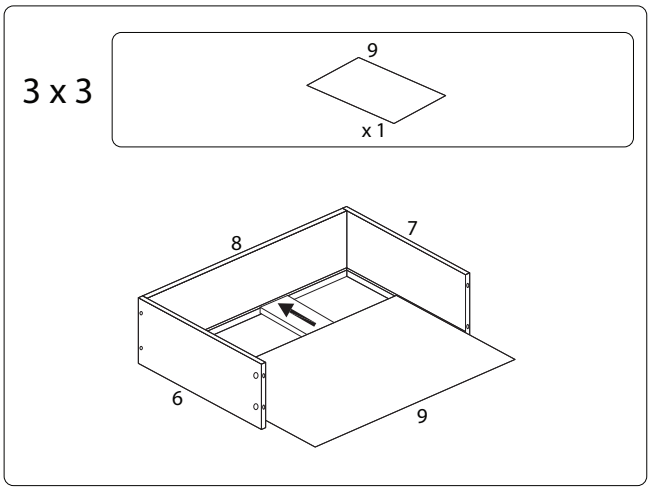
3 x 3
9
x 1
8
7
6
9

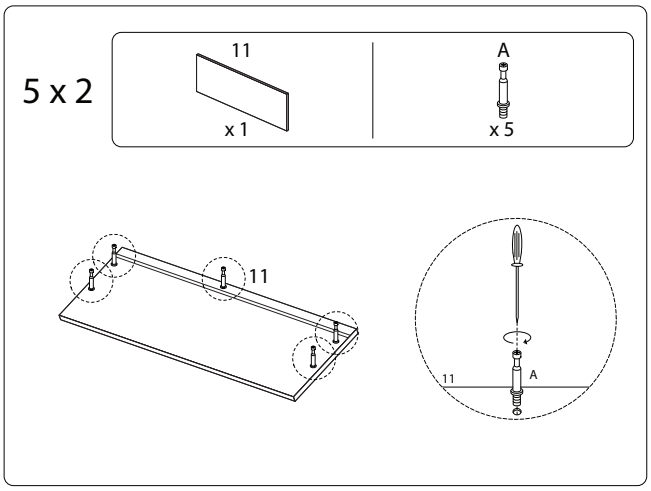
5 x 2
11
x 1
A
x 5
11
11
A

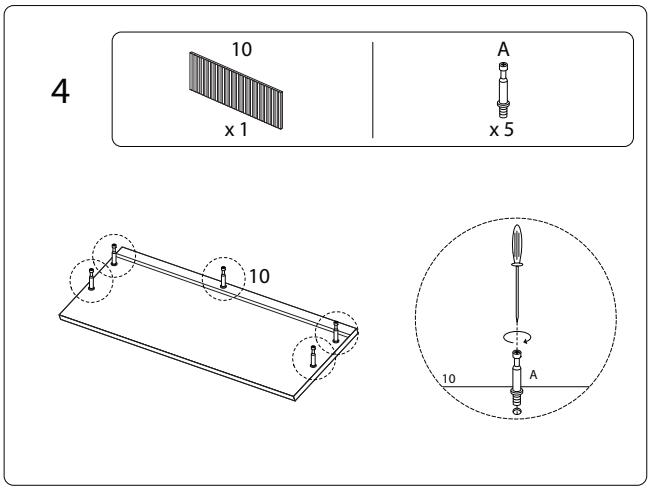
4
10
x 1
A
x 5
10
10
A

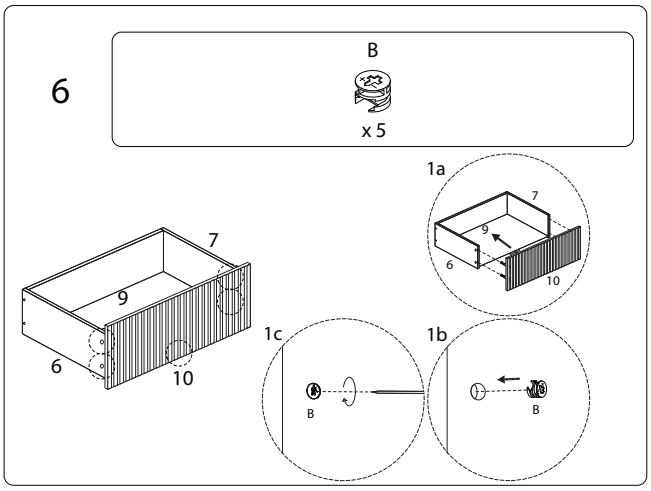
6
B
x 5
1a
7
9
6
10
7
9
6
10
1c
B
1b
B

7

D_L	D_R	H
x 1	x 1	M3 x 12 x 4

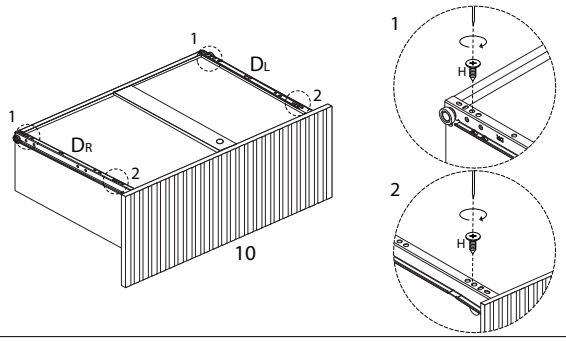

9 x 2

D_L	D_R	H
x 1	x 1	M3 x 12 x 4

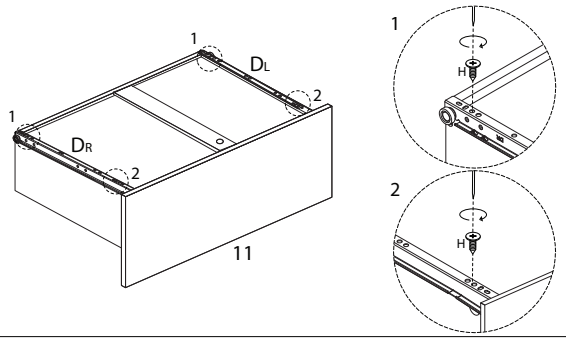

8 x 2

B
x 5

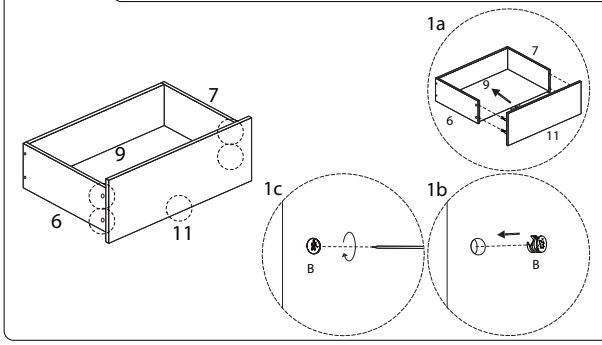

10

2	H	C_L
x 1	M3 x 12 x 9	x 3

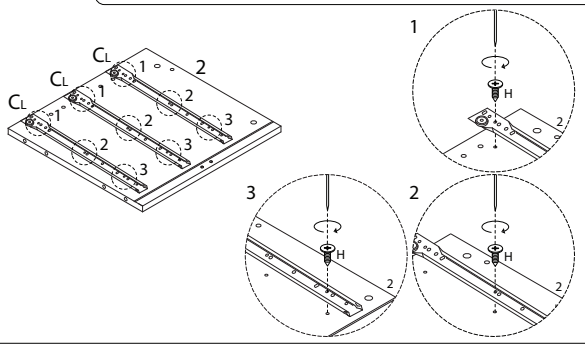

11

3	H	C_R
x 1	M3 x 12 x 9	x 3

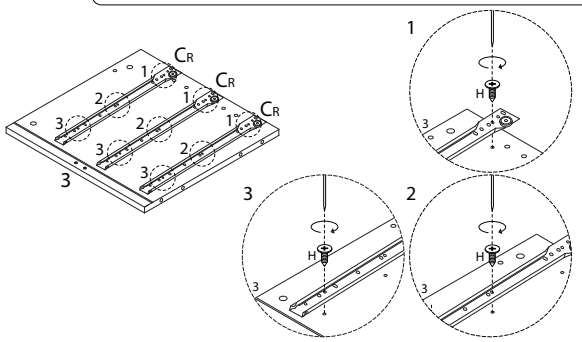

13

12	13	14	B
x 2	x 1	x 1	x 5

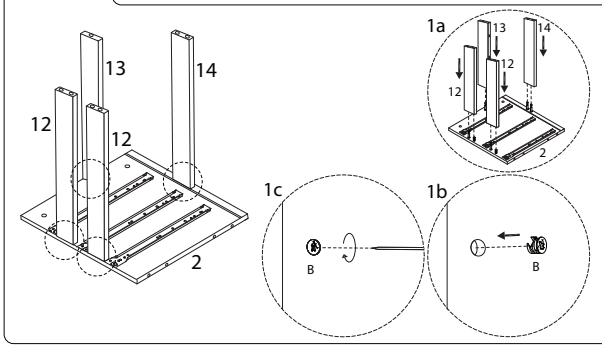

12

A	C
x 10	x 4

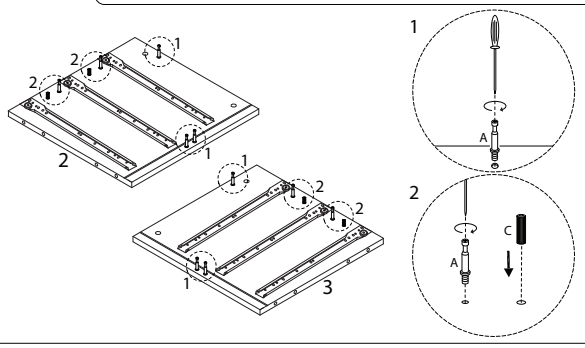

14

B
x 5

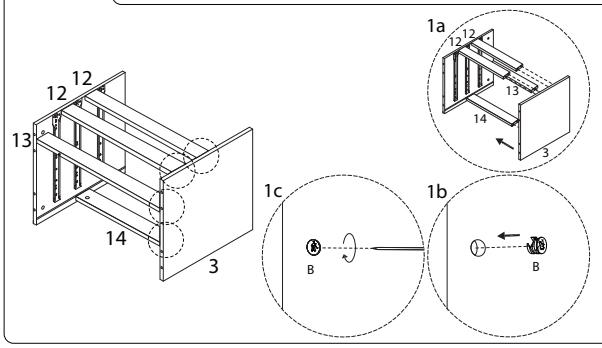

15

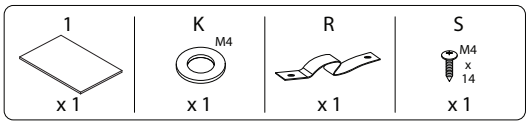

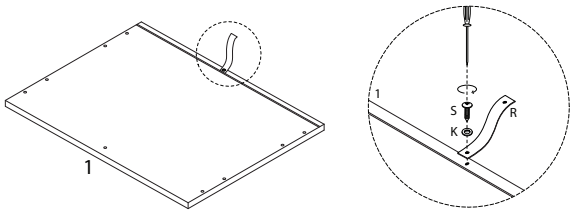

16

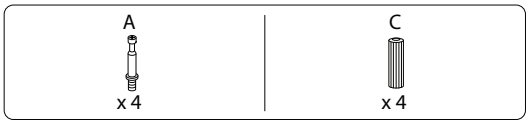

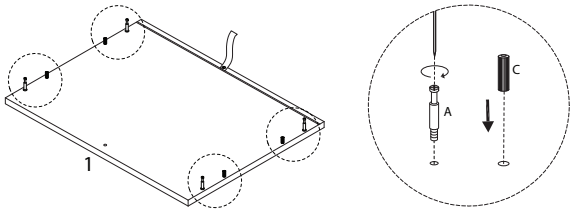

17

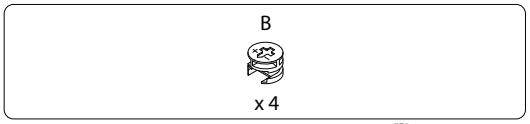

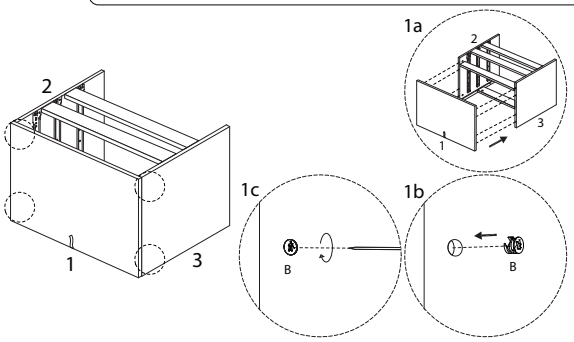

18

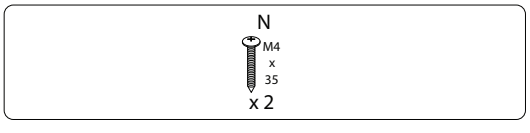

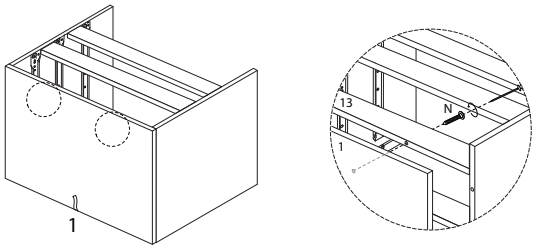

19

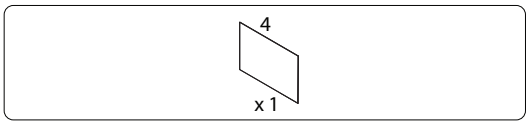

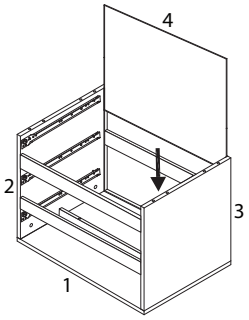

20

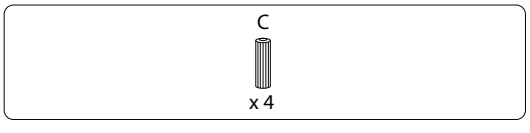

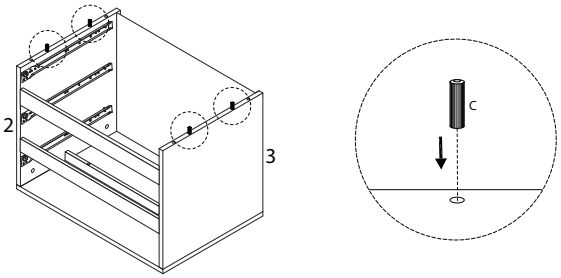

21

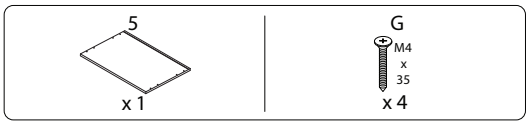

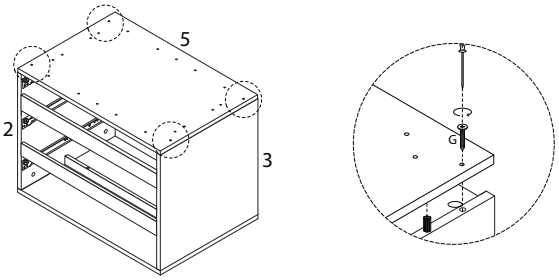

22

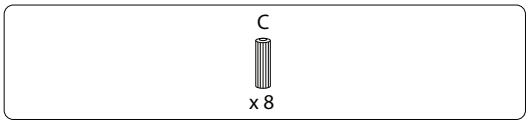

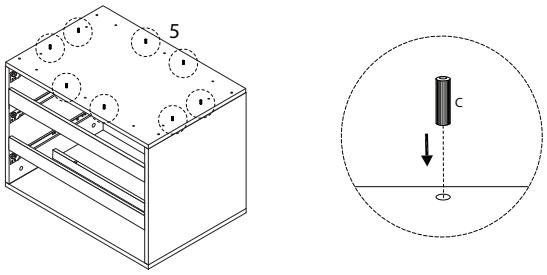

23

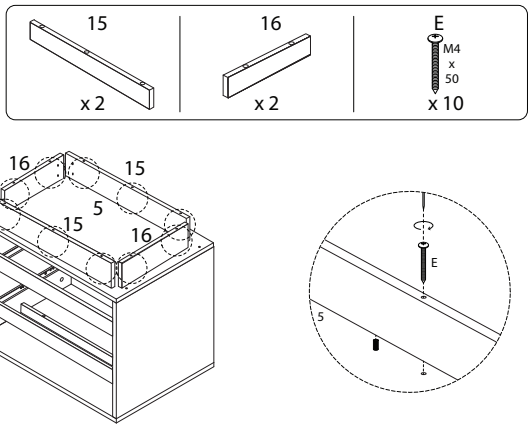
15
x 2
16
x 2
E
M4
x
50
x 10
16
15
5
15
16
E
5

24

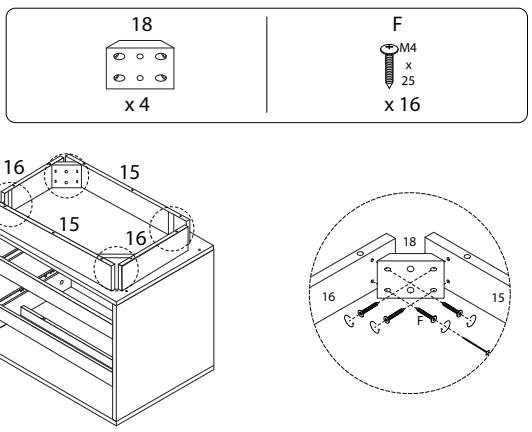
18
x 4
F
M4
x
25
x 16
16
15
15
16
18
16
15
F

25

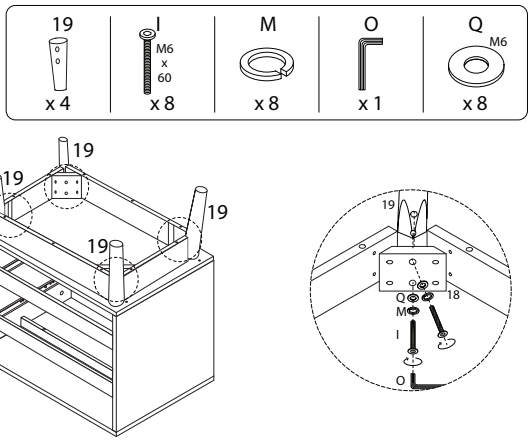
19
x 4
I
M6
x
60
x 8
M
x 8
O
x 1
Q
M6
x 8
19
19
19
19
19
Q
M
I
O
18

26

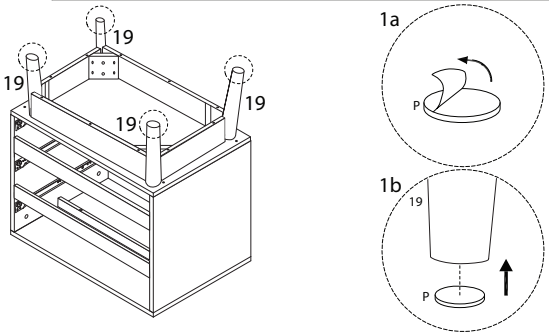
P
x 4
19
19
19
19
1a
P
1b
19
P

27

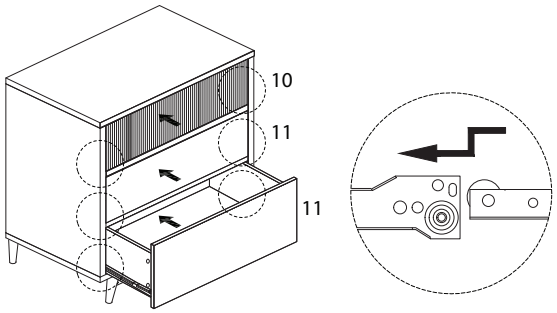
10
11
11

!

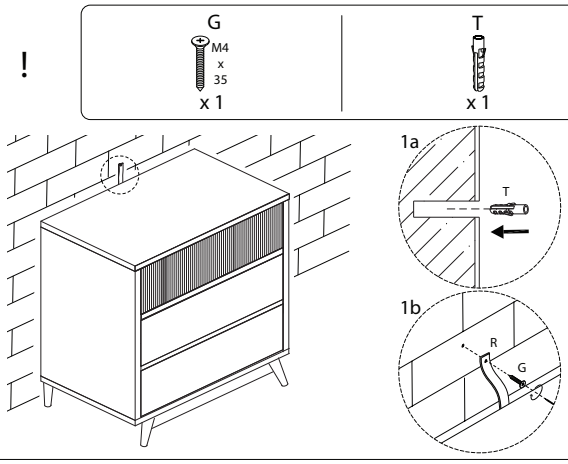
G
M4
x
35
x 1
T
x 1
1a
T
1b
R
G