SHESLAY

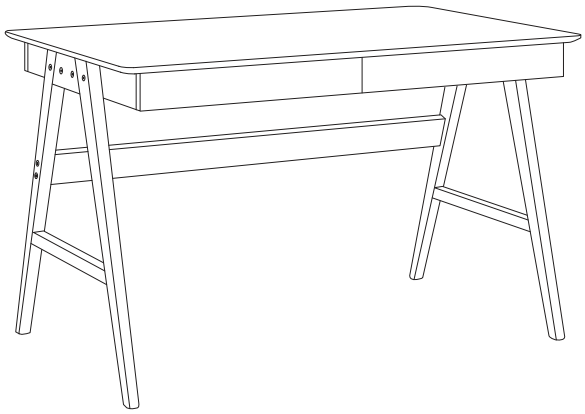

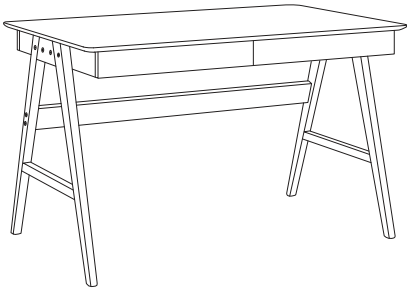

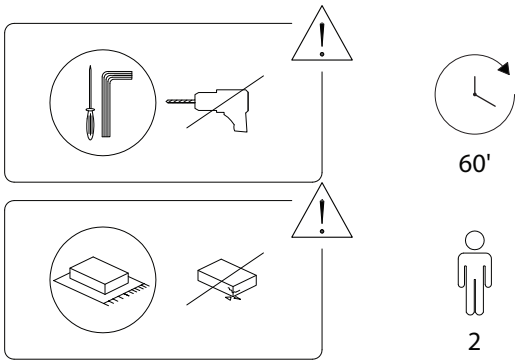

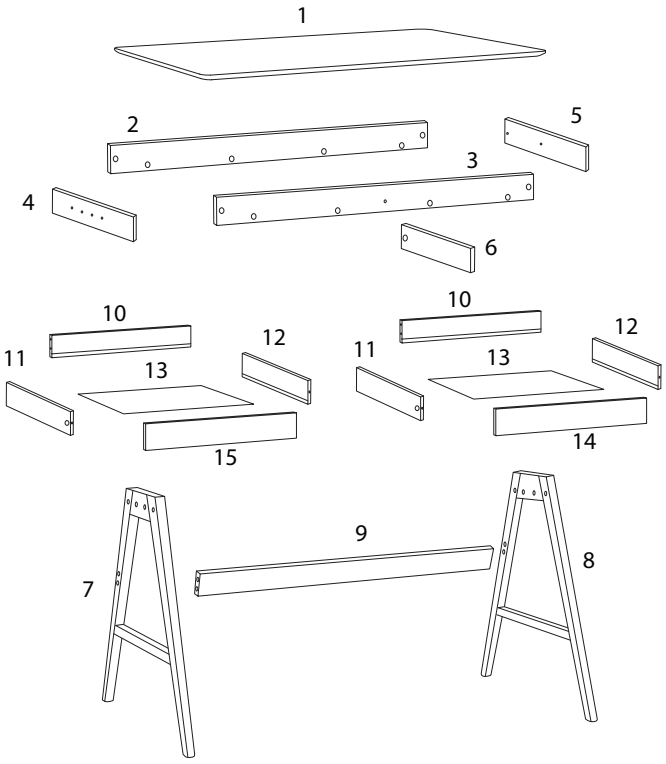

1  x 1	2  x 1	3  x 1
4  x 1	5  x 1	6  x 1
7  x 1	8  x 1	9  x 1
10  x 2	11  x 2	12  x 2
13 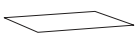 x 2	14  x 1	15  x 1

A	B	C
		
x 23	x 23	x 6
D1	**D2**	**E**
		
x 4	x 4	x 16
F	**G**	**H**
		
x 8	x 4	x 4
I	**J**	**K**
		
x 1	x 8	x 4

5/15

!

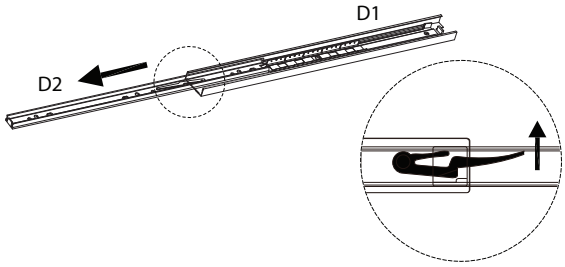

1

7	8	9	H	G	I
					
x 1	x 1	x 1	x 4	x 4	x 1

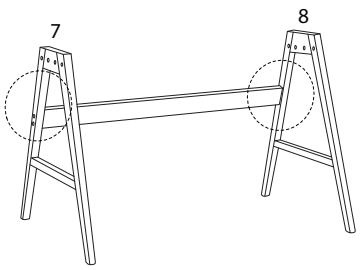

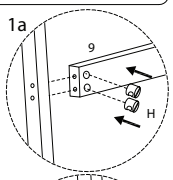

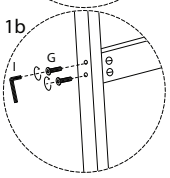

6/15

2

K

x 4

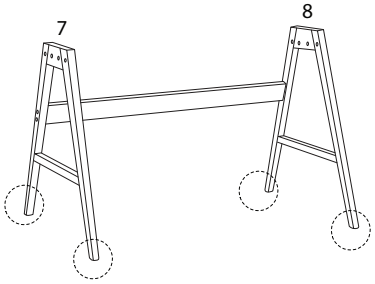

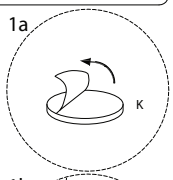

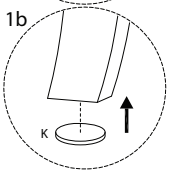

4

3	A
	
x 1	x 1

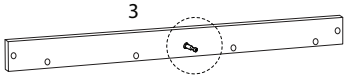

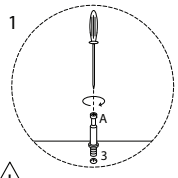

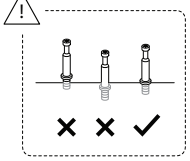

3

4	5	A
		
x 1	x 1	x 4

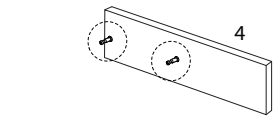

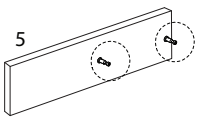

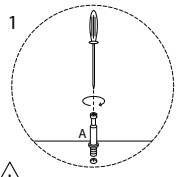

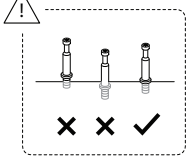

7/15

5

2	6
	
x 1	x 1

8/15

6

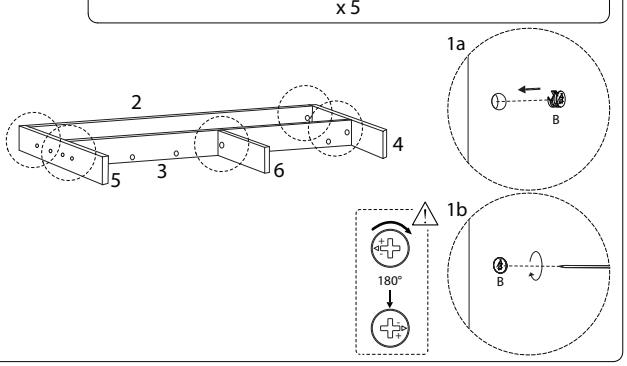

7

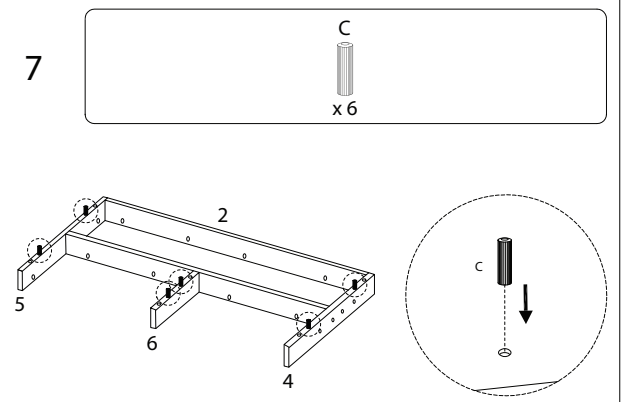

8

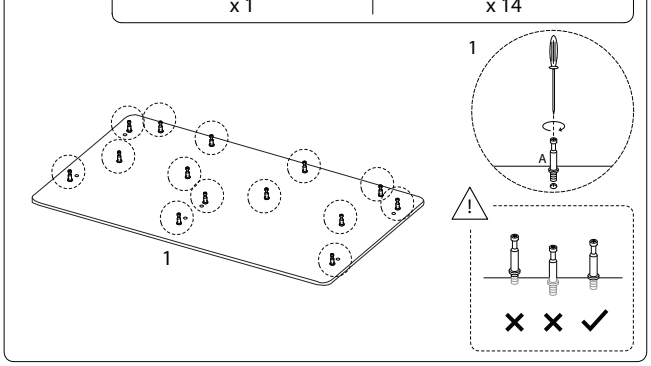

9

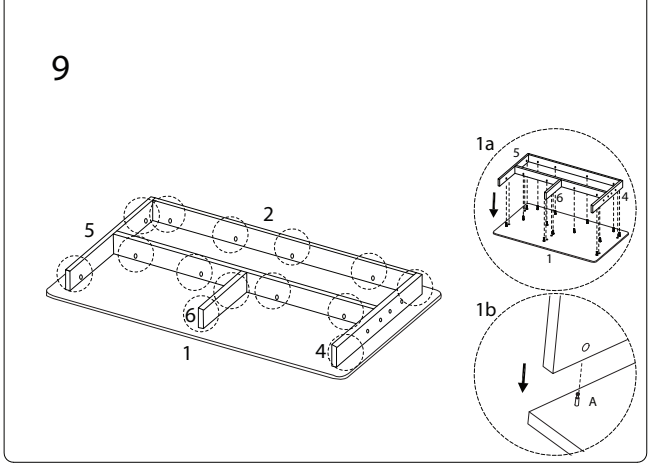

10

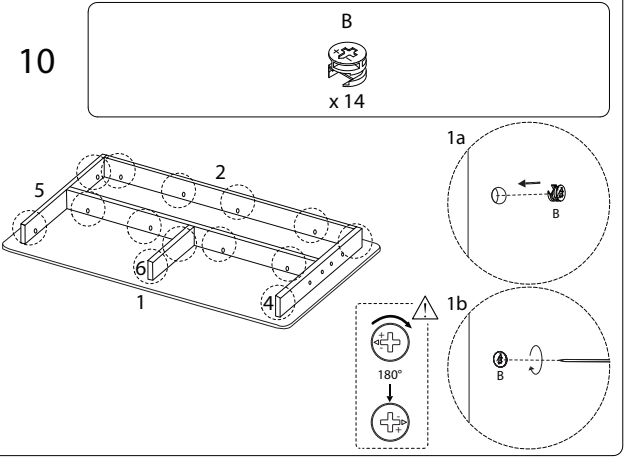

11

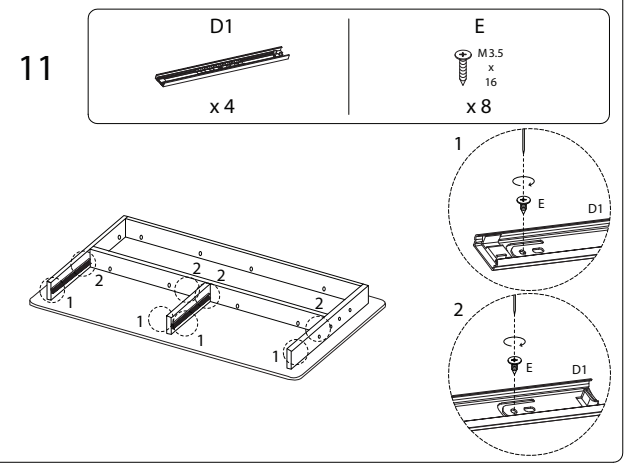

12

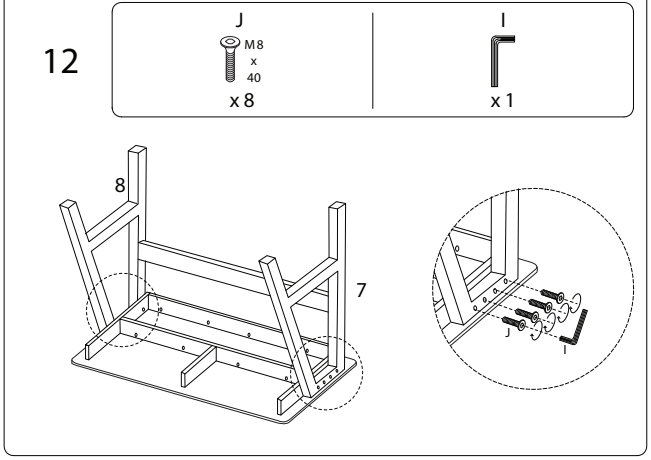

13 x 2

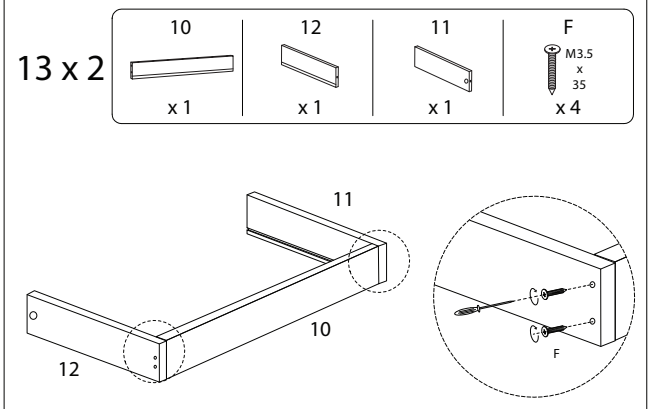

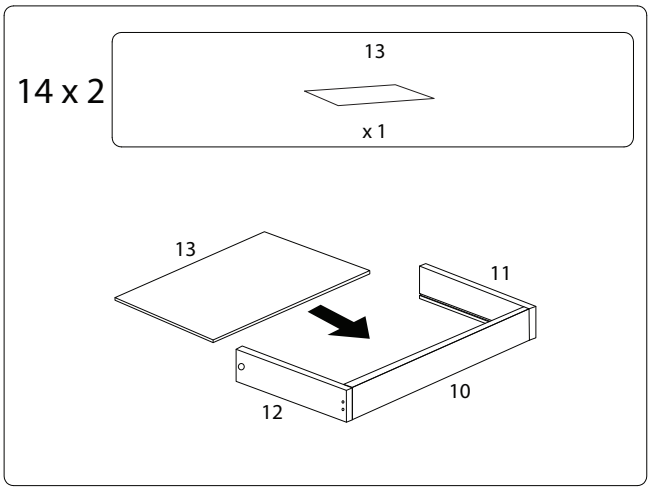
14 x 2
13
x 1
13
11
12
10

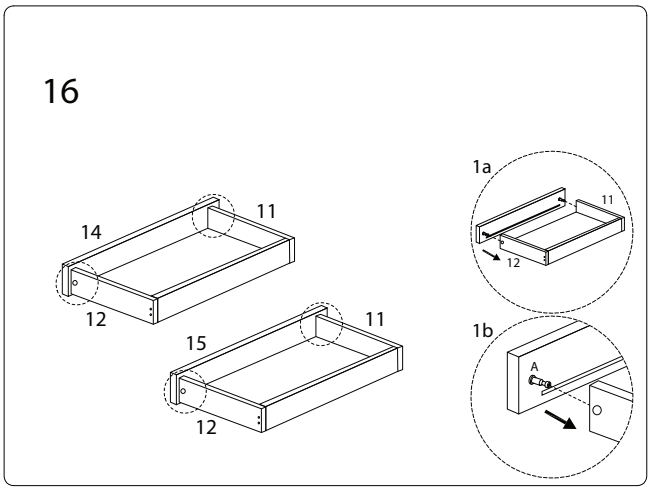
16
14
11
12
15
11
12
1a
11
12
1b
A

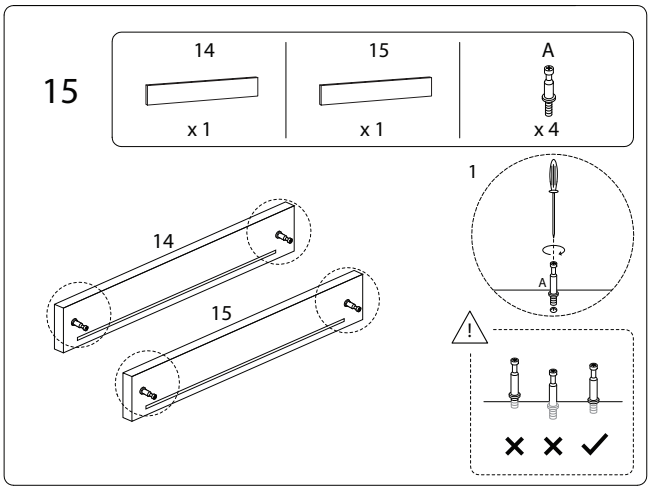
15
14
x 1
15
x 1
A
x 4
14
15
1
A

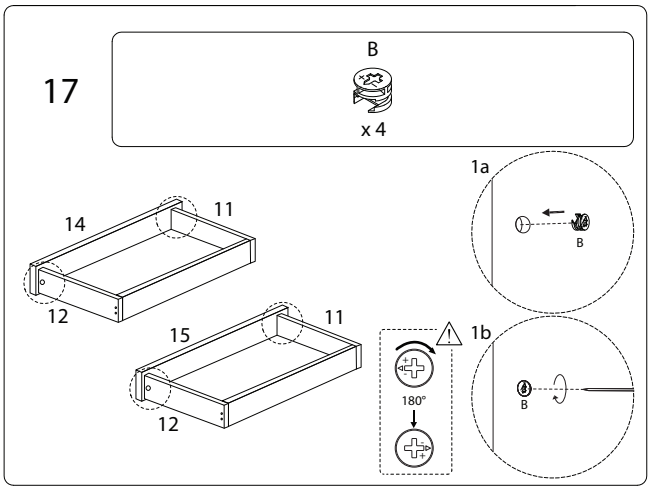
17
B
x 4
14
11
12
15
11
12
1a
B
180°
1b
B

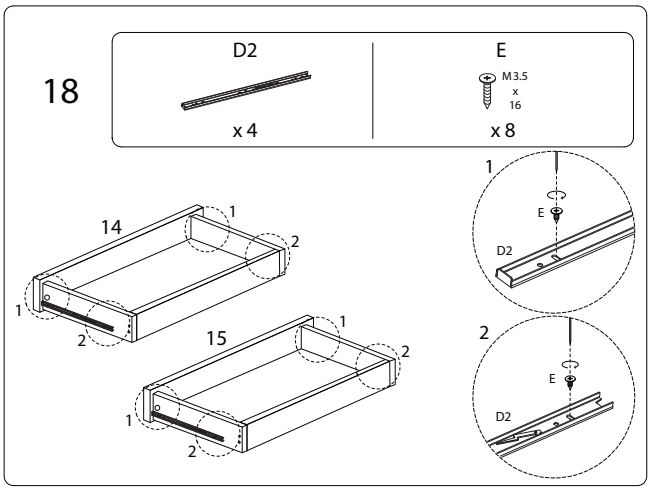
18
D2
x 4
E
M3.5
x
16
x 8
14
15
1
2
E
D2

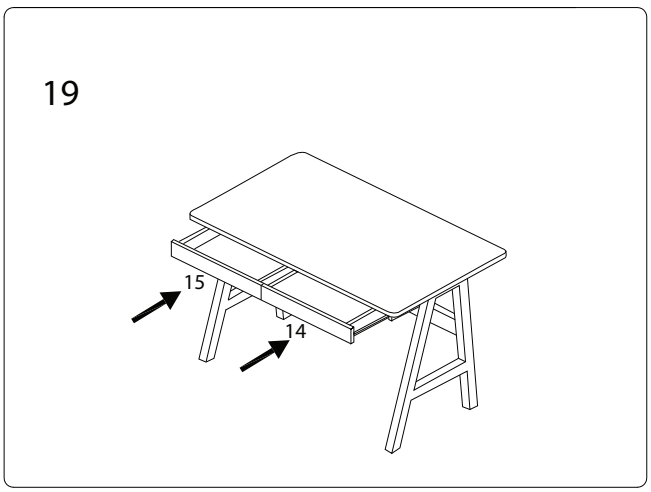
19
15
14