BUNYAN



1/9

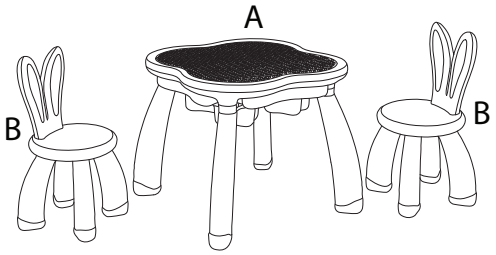

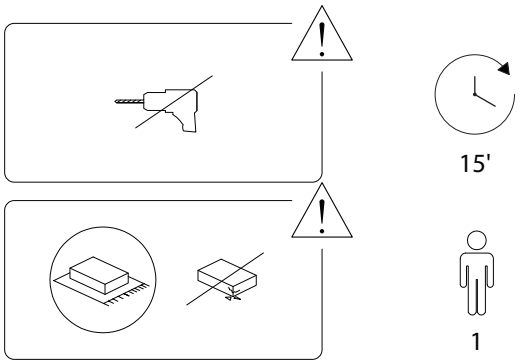

2/9

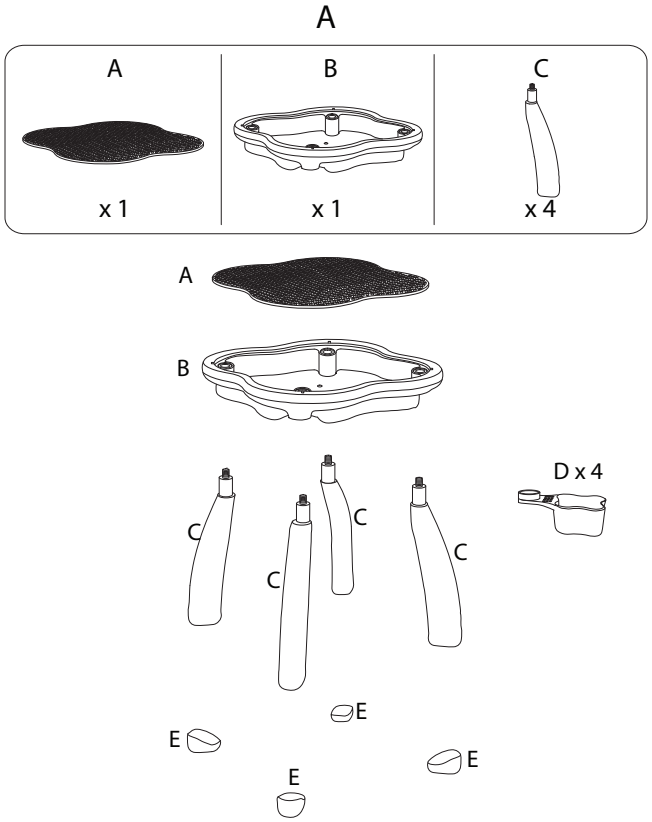

3/9

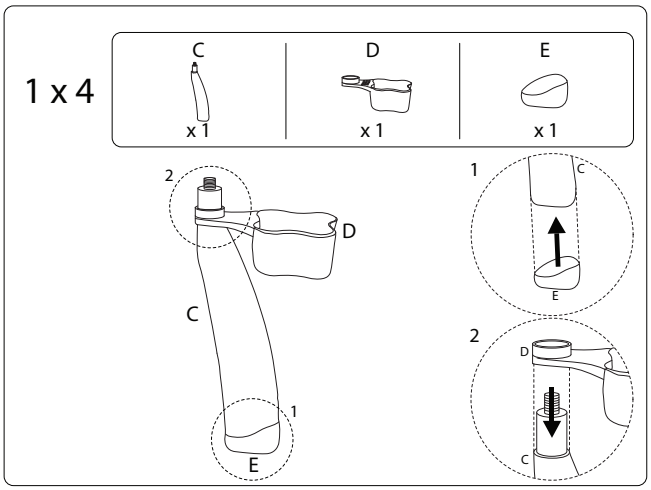

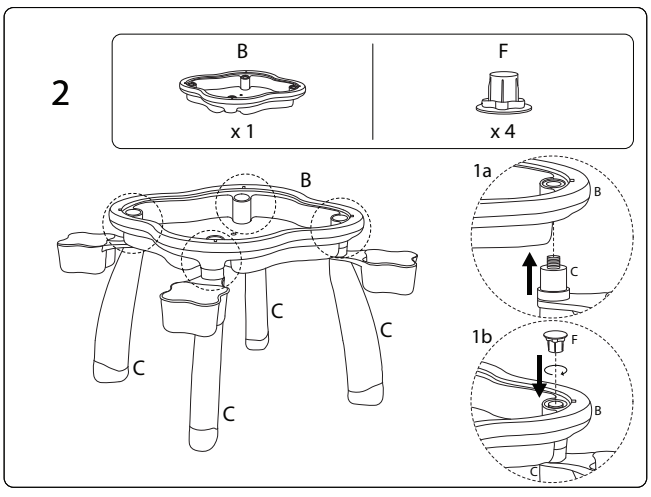

4/9

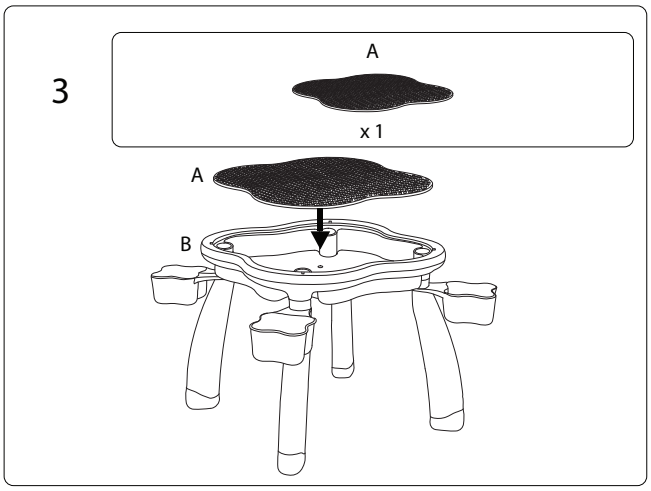
3
A
x 1
A
B

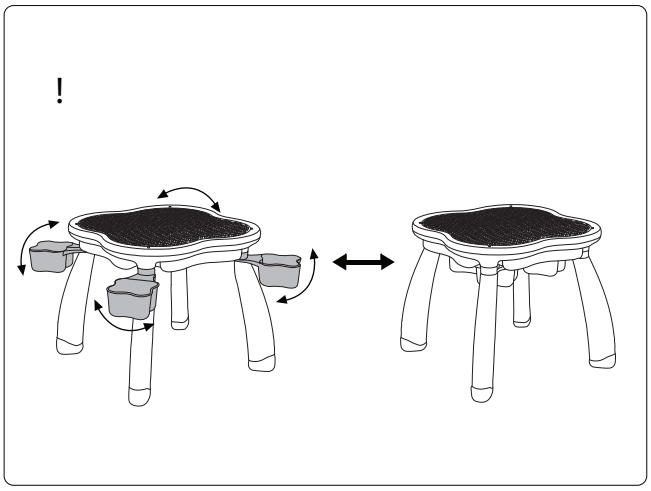
!

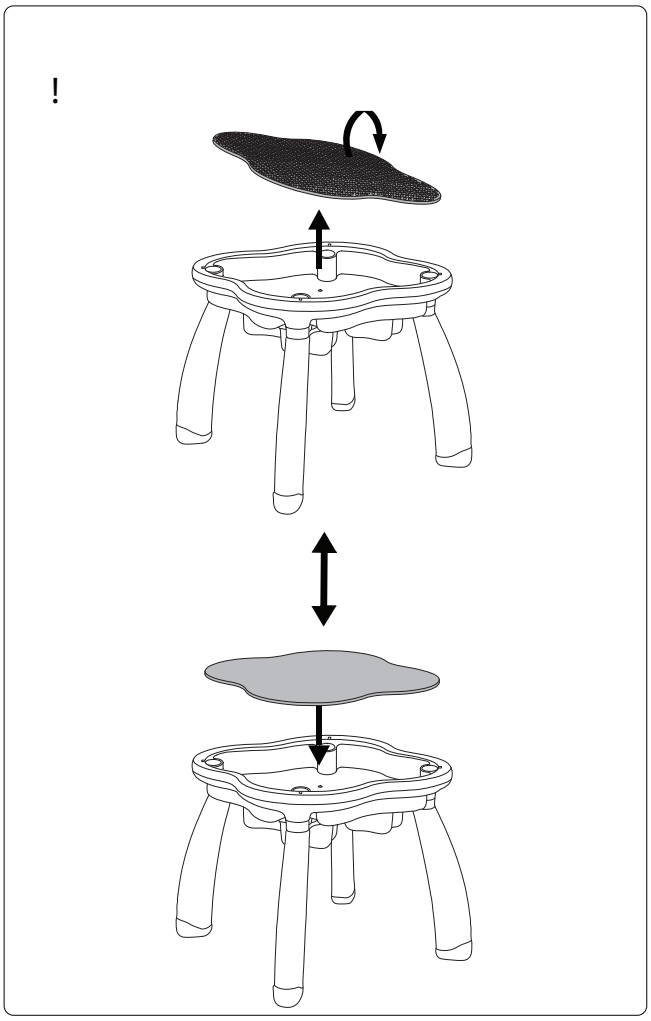
!

B x 2

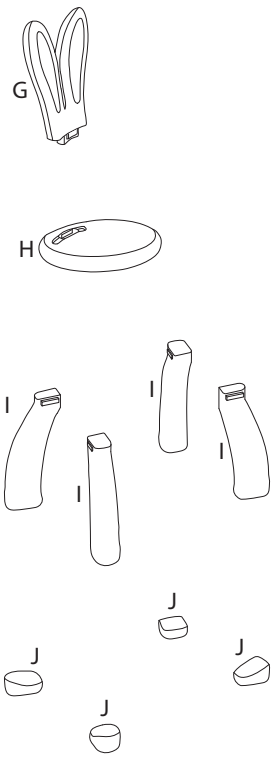
G
H
I
I
I
I
J
J
J
J

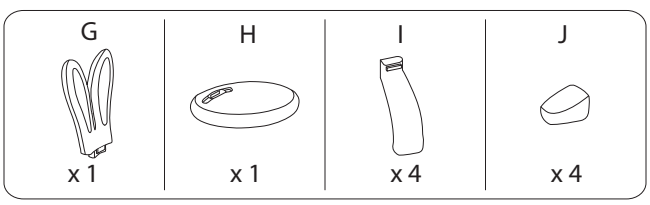
G
x 1
H
x 1
I
x 4
J
x 4

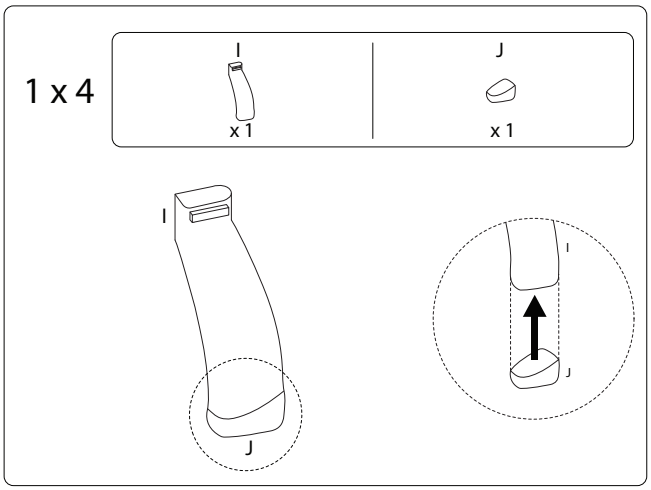
1 x 4
I
x 1
J
x 1
I
J
I
J

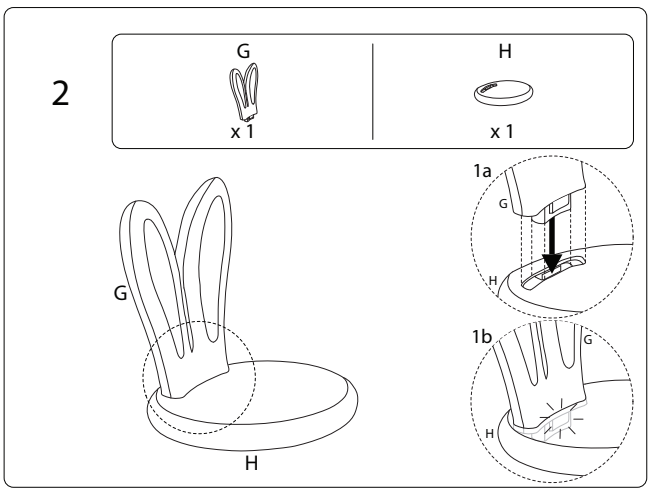
2
G
x 1
H
x 1
G
H
1a
G
H
1b
G
H

3

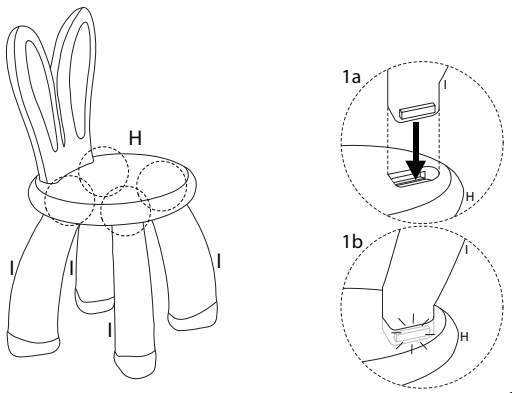

!

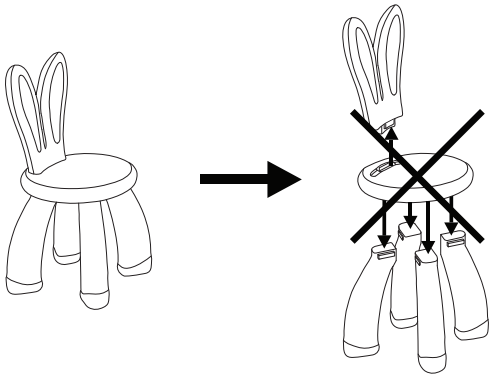

2902/BUNYAN/210926/