HEMING

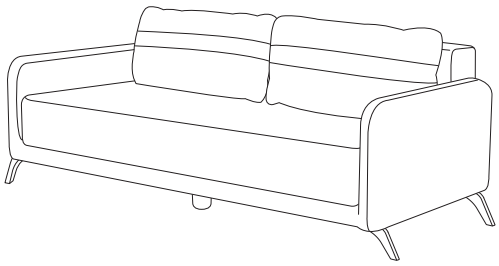

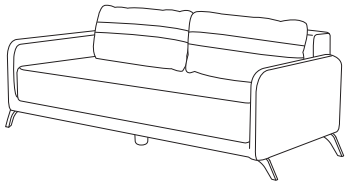

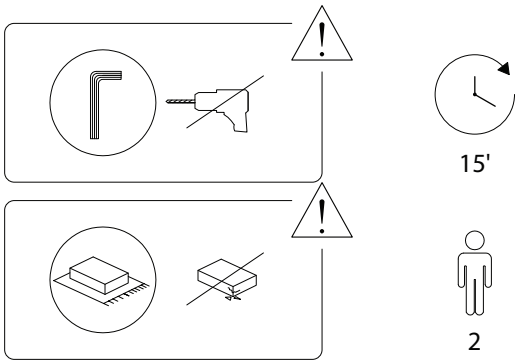

1/6

A	B	C	D
x 1	x 1	x 2	x 1

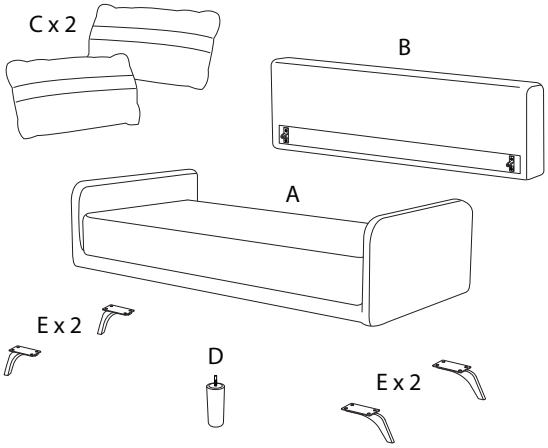

E	1	2	3
x 4	x 16	x 1	x 2

2/6

1

A	E	1	2
x 1	x 4	x 16	x 1

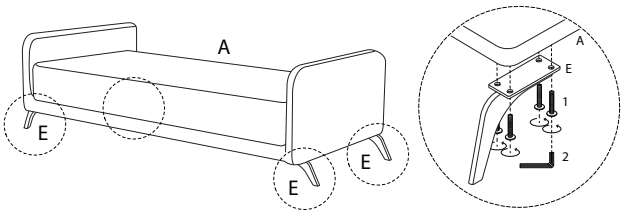

2

D
x 1

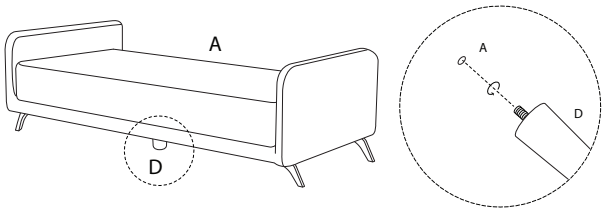

3/6

3

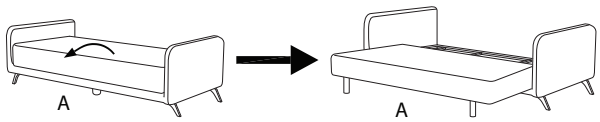

4

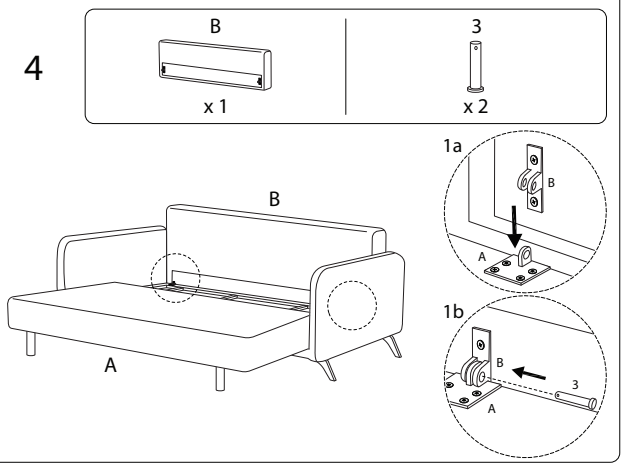

4/6

2339/HEMING/051224/

5

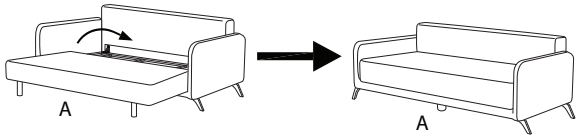

6

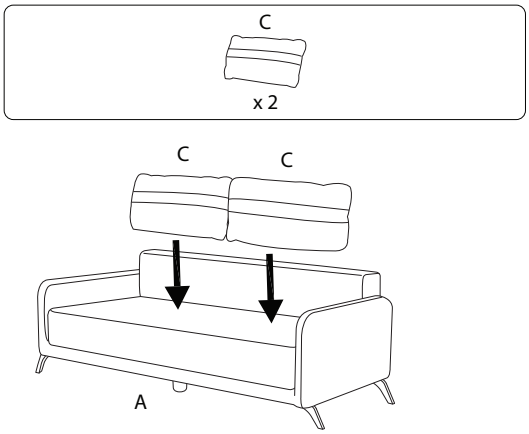

5/6

2339/HEMING/051224/

!

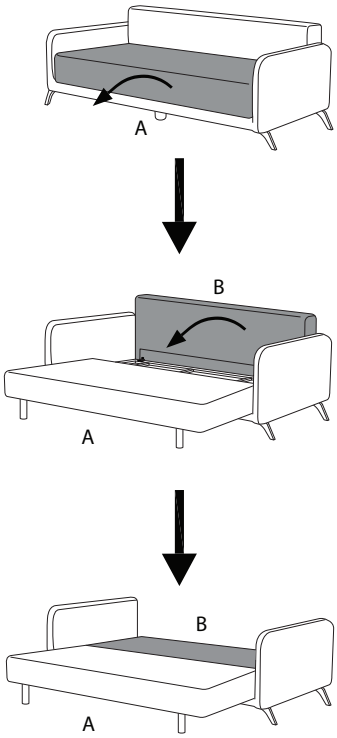

6/6

2339/HEMING/051224/