UNSTAD

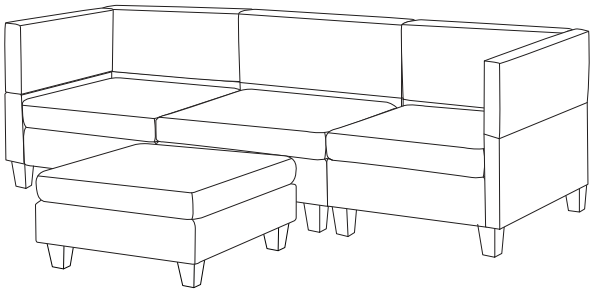

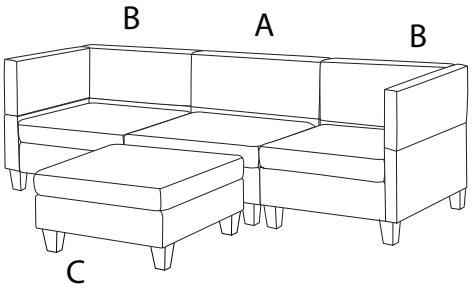

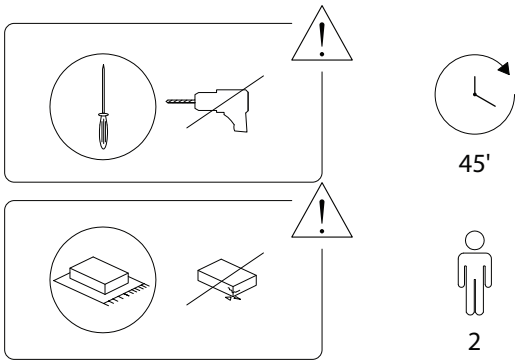

600/UNSTAD/280225/

A

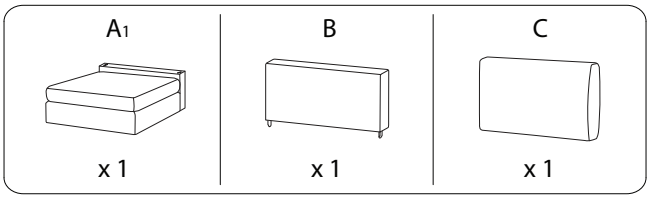

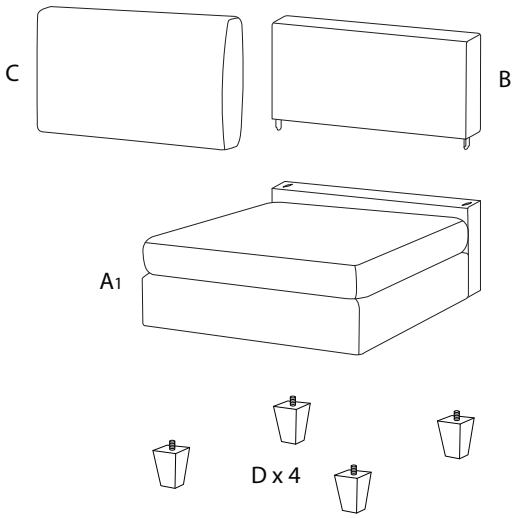

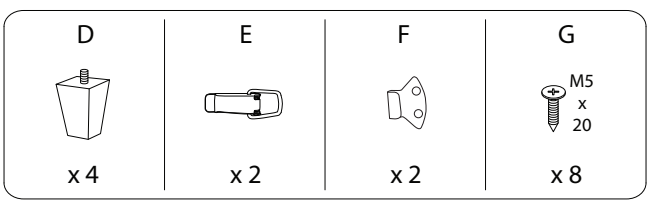

600/UNSTAD/280225/

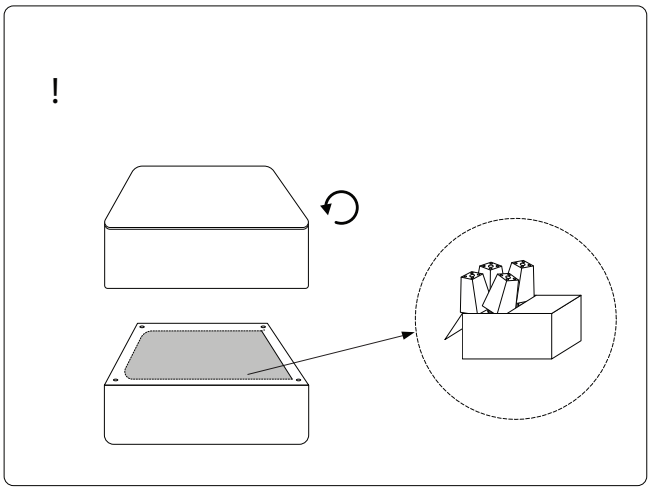

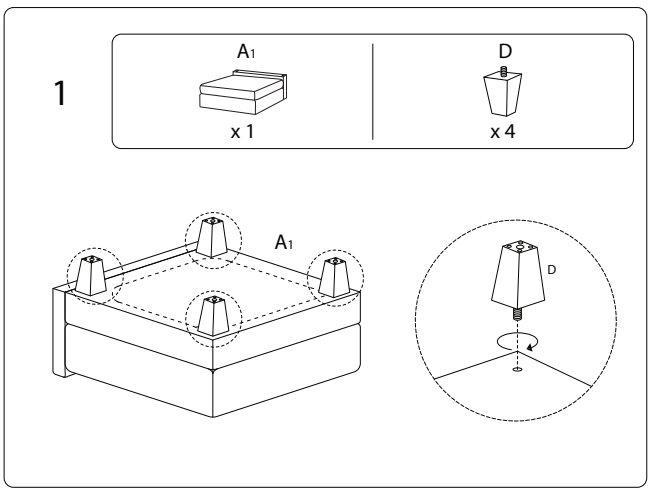

600/UNSTAD/280225/

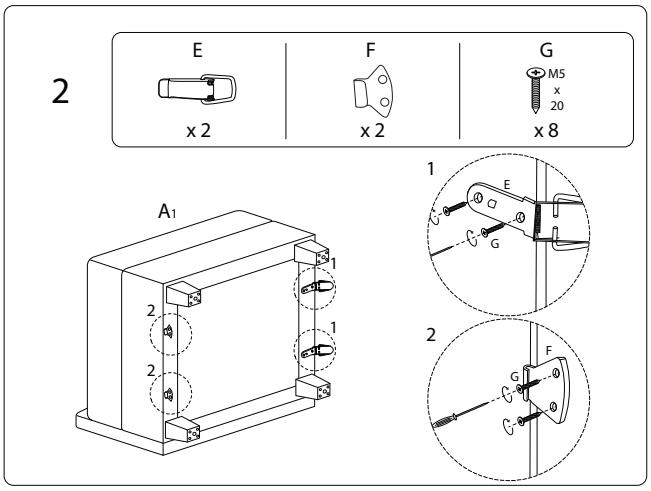

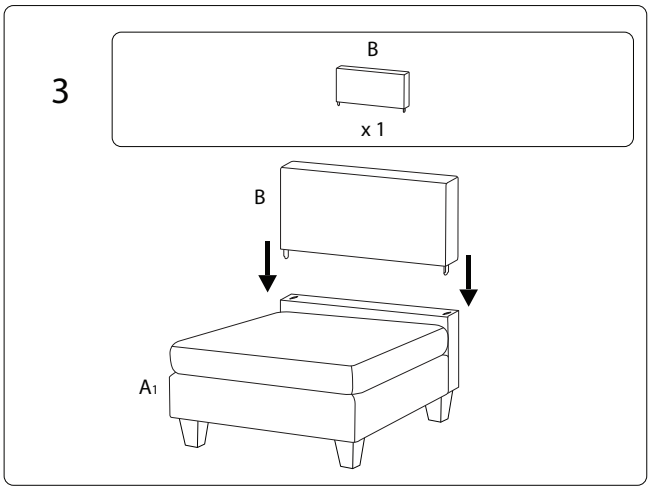

600/UNSTAD/280225/

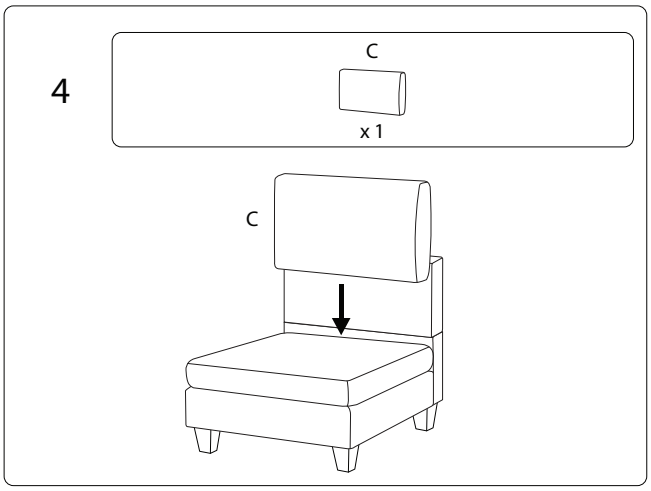

600/UNSTAD/280225/

B

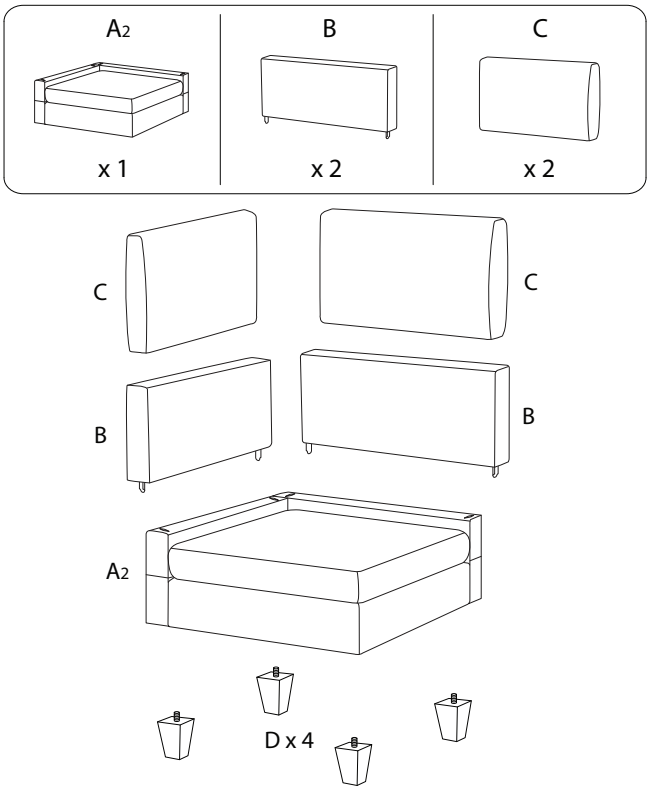

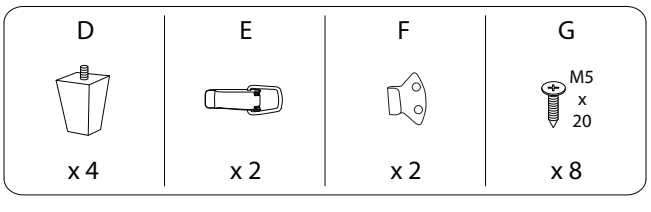

600/UNSTAD/280225/

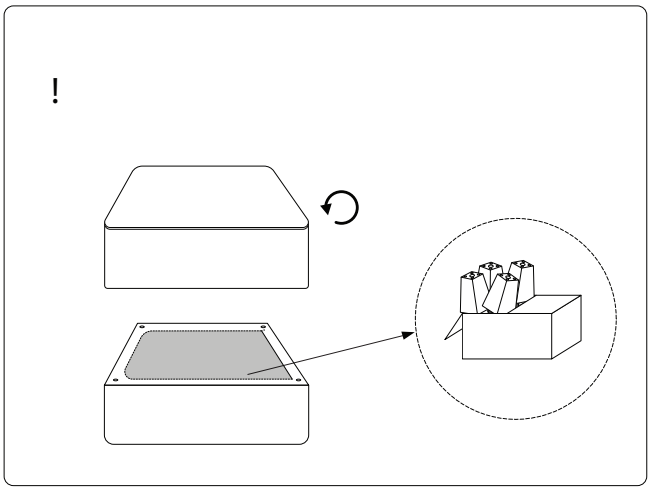

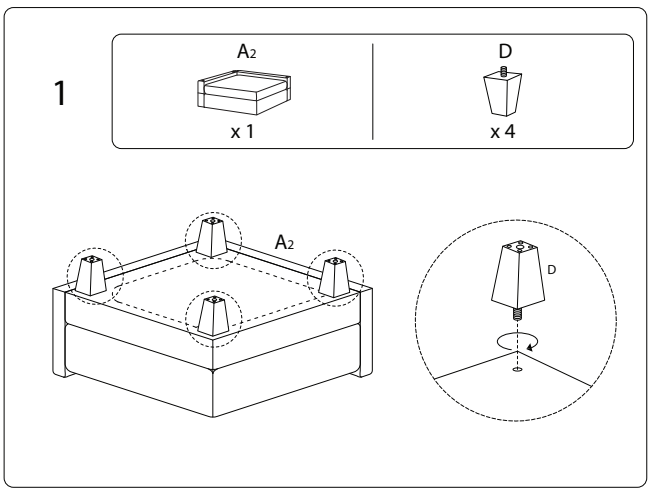

600/UNSTAD/280225/

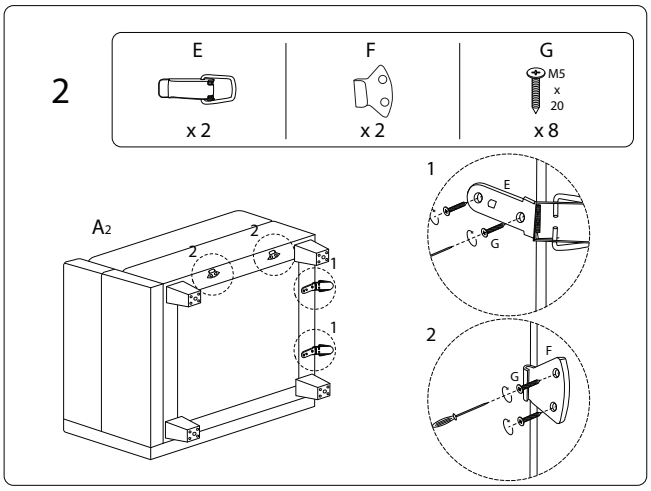
2
E
x 2
F
x 2
G
M5
x
20
x 8
A2
2
2
1
1
1
E
G
2
F
G

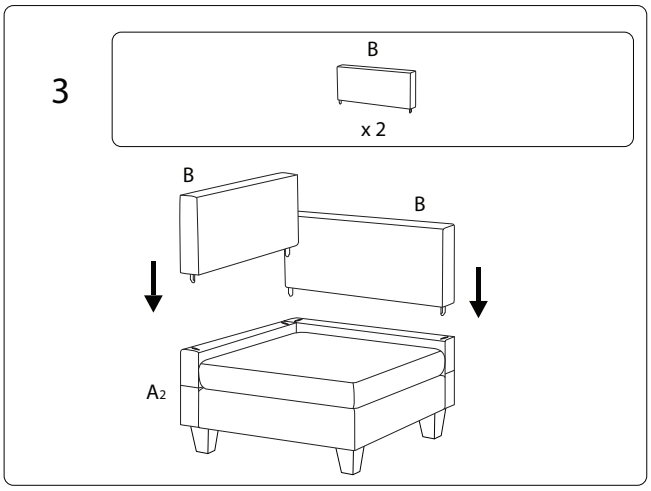
3
B
x 2
B
B
A2

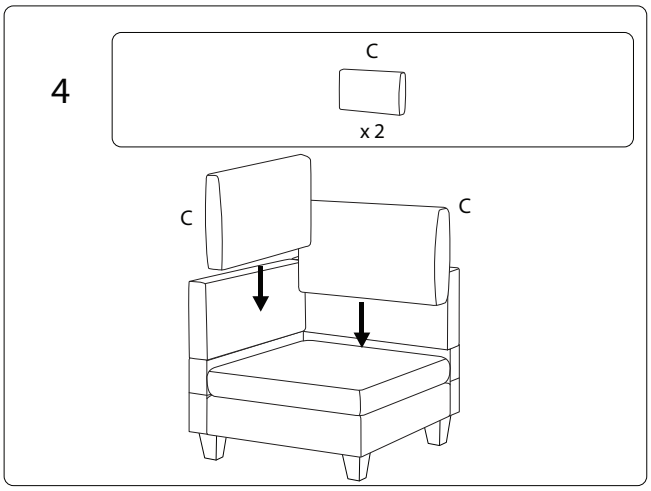
4
C
x 2
C
C

C

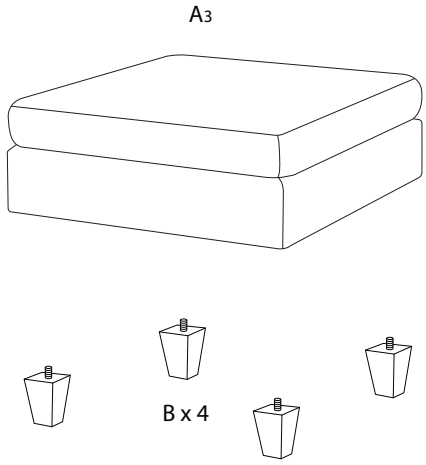
A3
B x 4

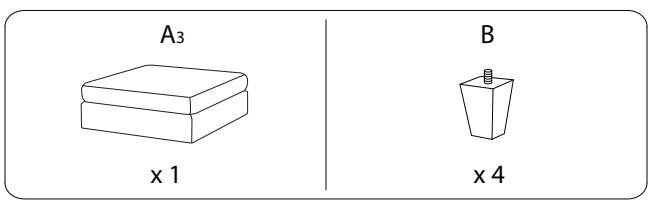
A3
x 1
B
x 4

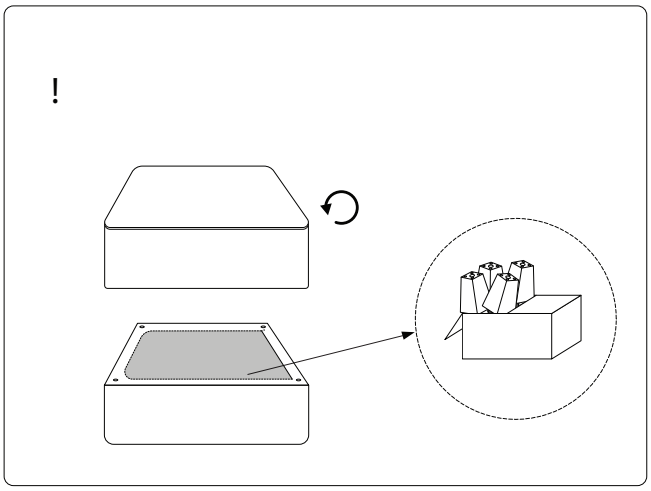
!

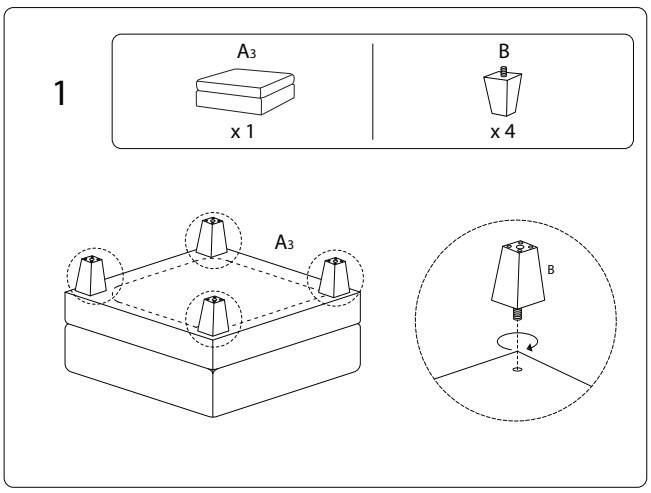
1
A3
x 1
B
x 4
A3
B

!

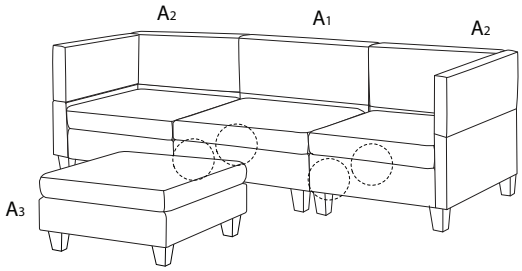

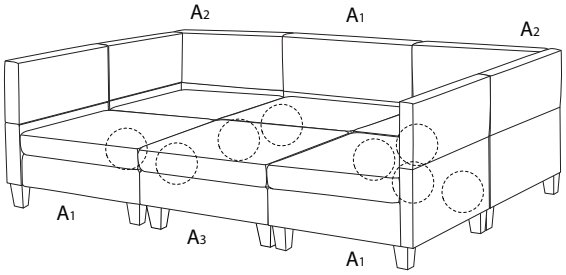

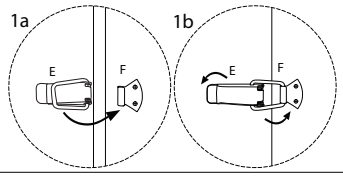

600/UNSTAD/280225/