HOBART

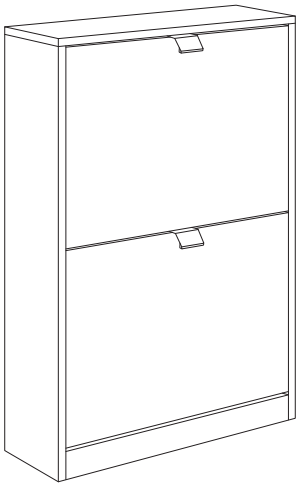

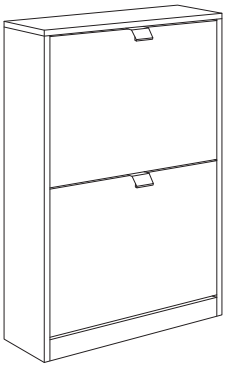

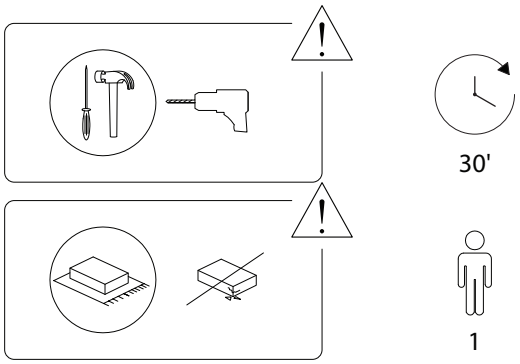
30'
1

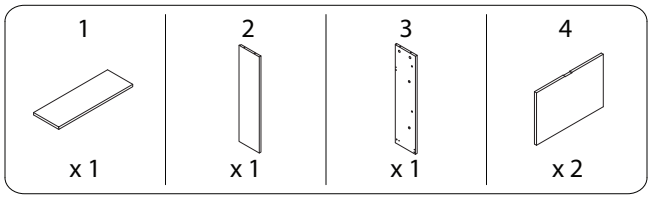
1
x 1
2
x 1
3
x 1
4
x 2

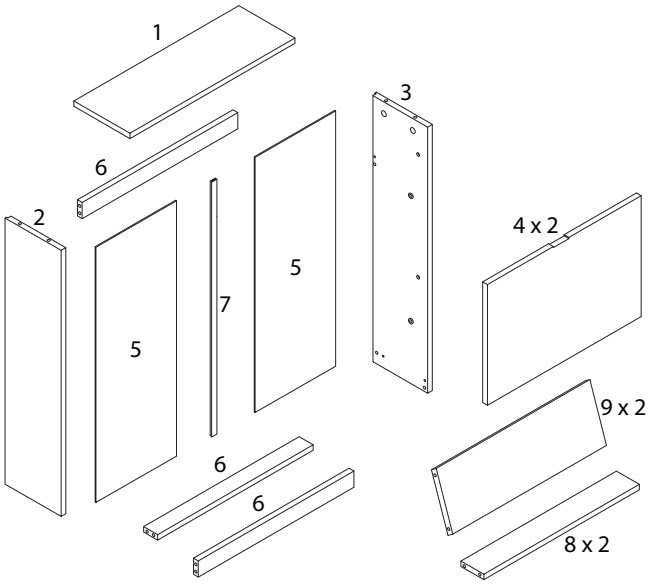
1
6
2
5
5
7
3
4 x 2
9 x 2
6
6
8 x 2

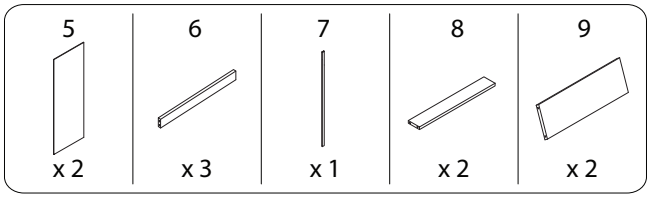
5
x 2
6
x 3
7
x 1
8
x 2
9
x 2

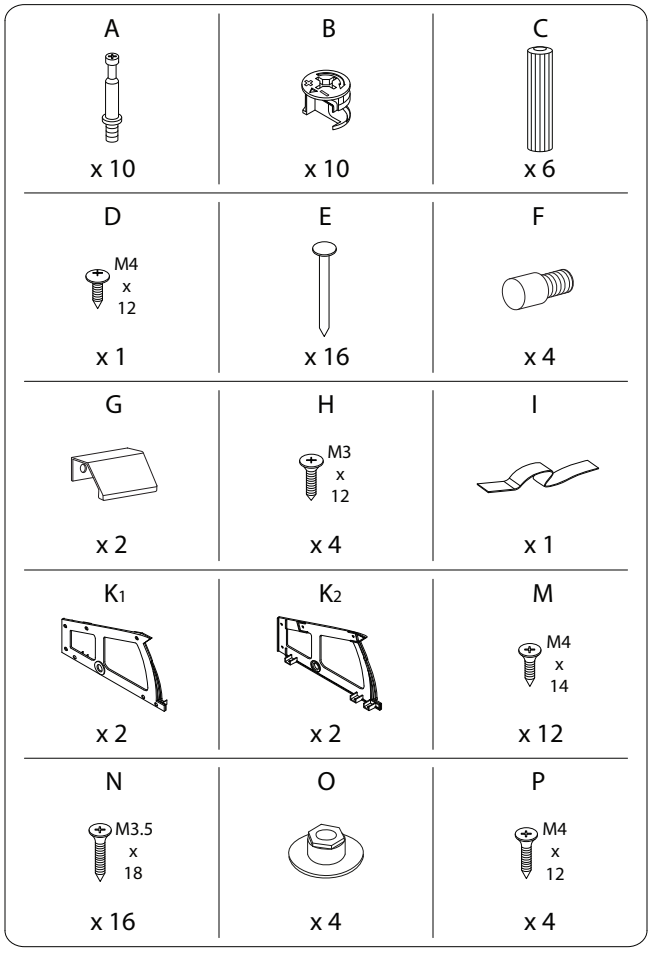
A
x 10
B
x 10
C
x 6
D
M4
x
12
x 1
E
x 16
F
x 4
G
x 2
H
M3
x
12
x 4
I
x 1
K1
x 2
K2
x 2
M
M4
x
14
x 12
N
M3.5
x
18
x 16
O
x 4
P
M4
x
12
x 4

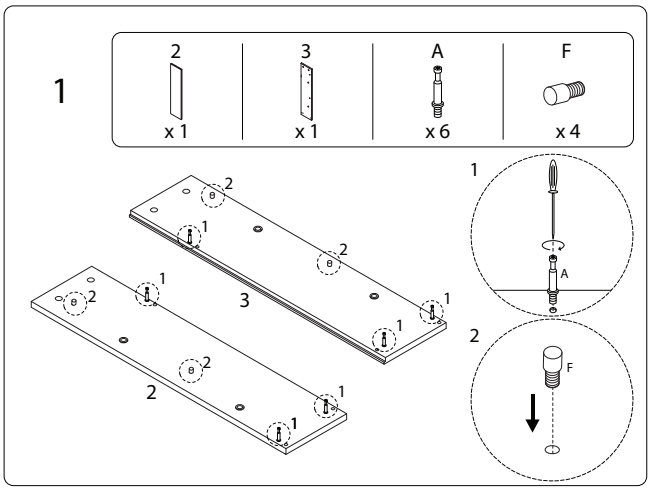
1
2
x 1
3
x 1
A
x 6
F
x 4
1
2
3
A
F

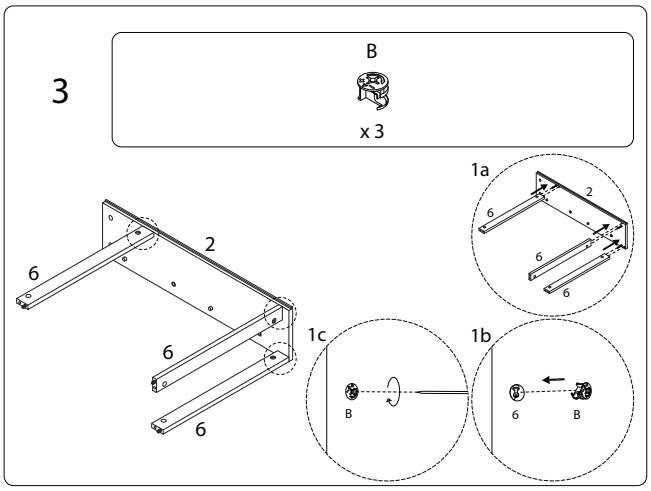
3
B
x 3
1a
1b
1c
2
6
B

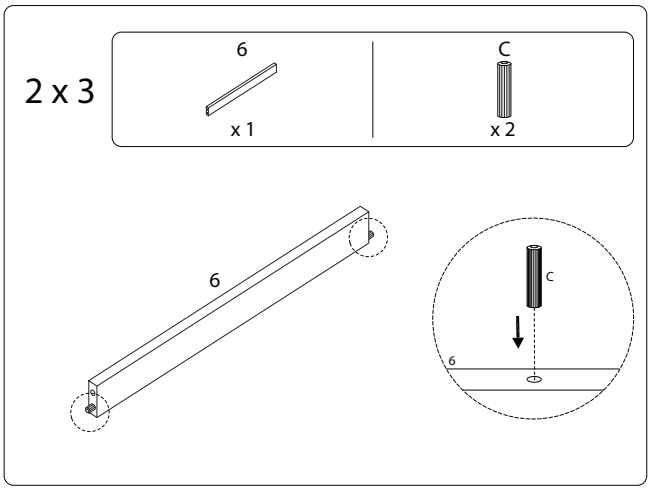
2 x 3
6
x 1
C
x 2
6
C

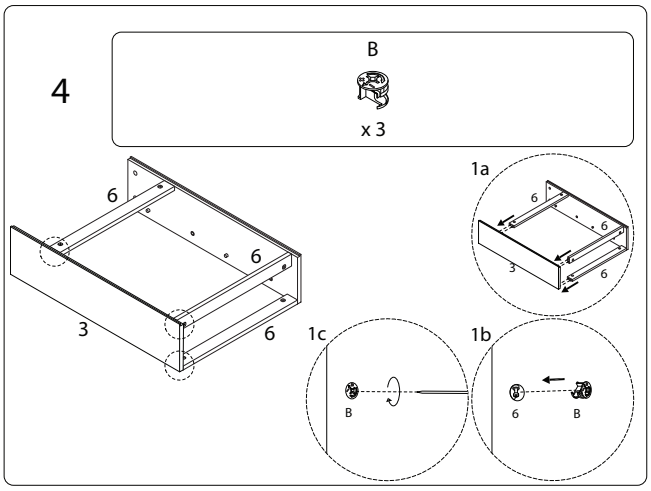
4
B
x 3
1a
1b
1c
6
3
B

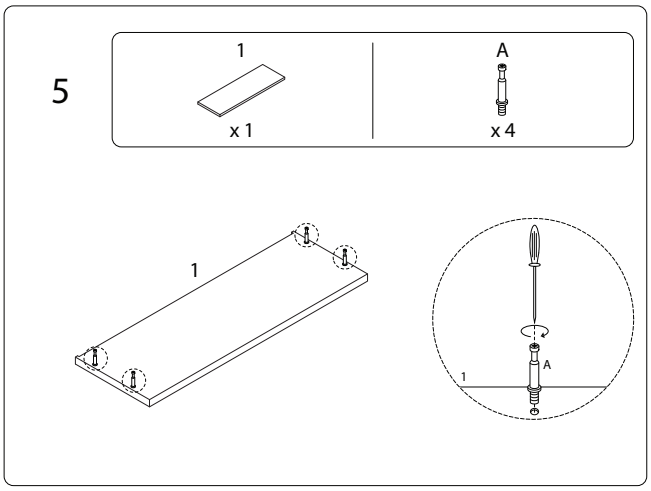
5
1
x 1
A
x 4
1
A

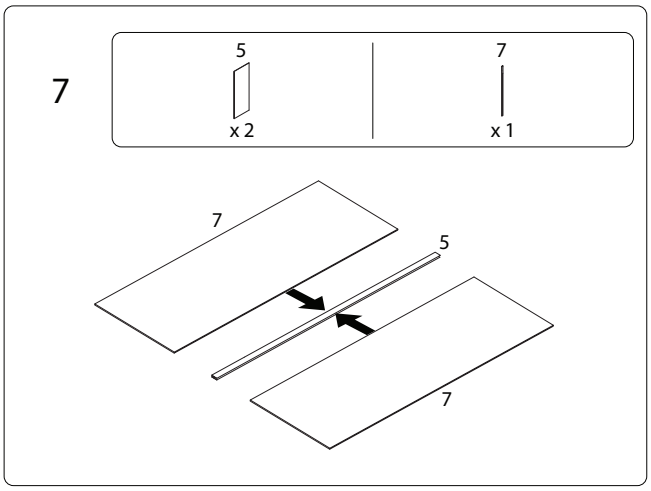
7
5
x 2
7
x 1
7
5
7

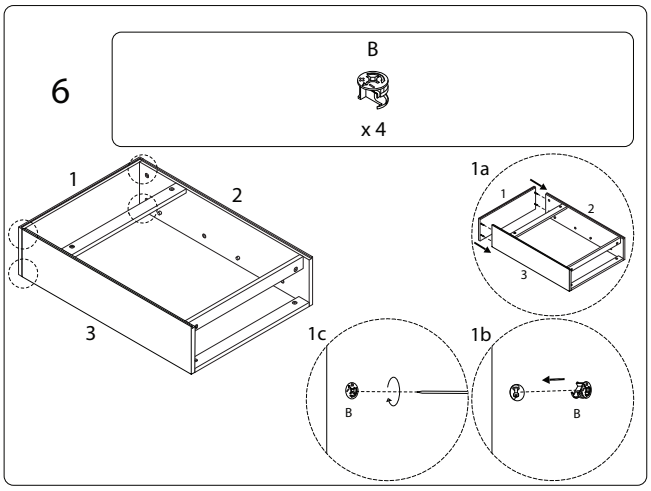
6
B
x 4
1
2
3
1a
1b
1c
B

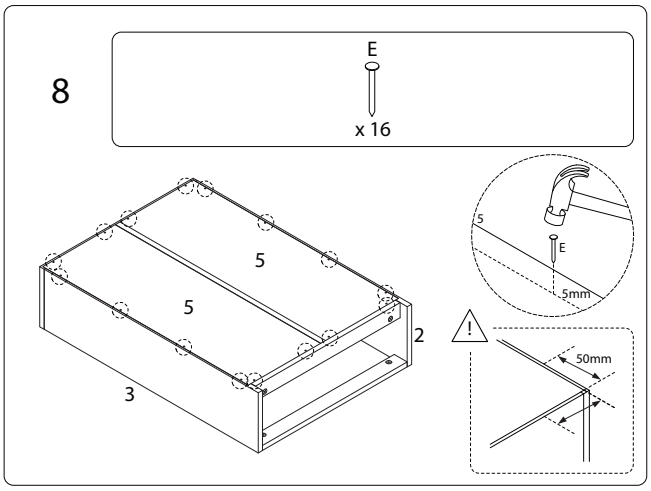
8
E
x 16
5
2
3
E
5mm
50mm

9

D	I
M4 x 12	
x 1	x 1

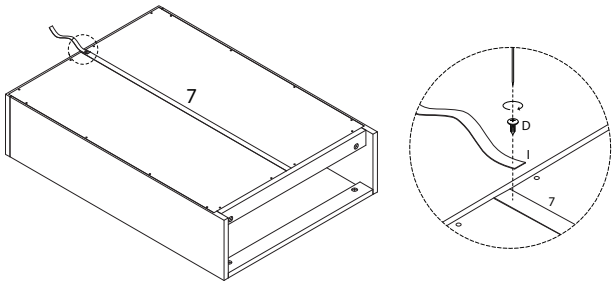

11 x 2

G	H
	M3 x 12
x 1	x 2

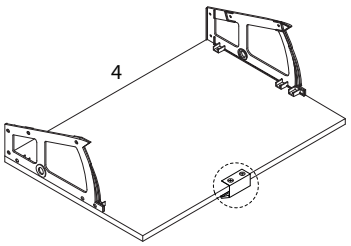

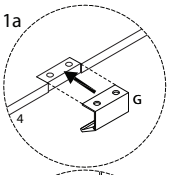

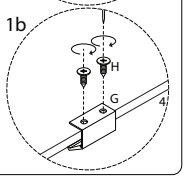

10 x 2

4	K1	K2	M
			M4 x 14
x 1	x 1	x 1	x 6

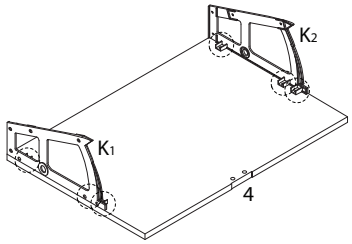

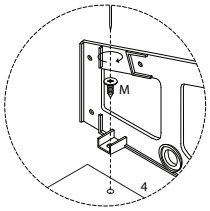

12 x 2

8	9	N
		M3.5 x 18
x 1	x 1	x 8

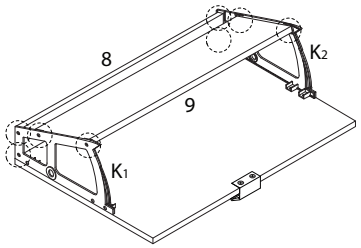

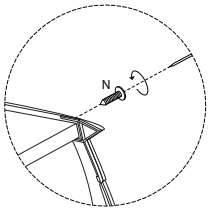

1444/HOBART/060526/

1444/HOBART/060526/

13

O	P
	M4 x 12
x 2	x 2

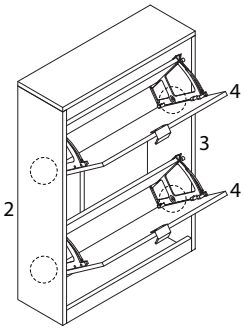

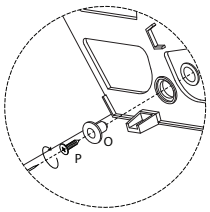

14

H
M3 x 12
x 1

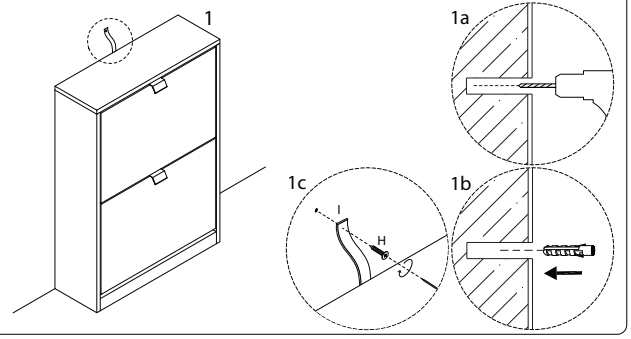

1444/HOBART/060526/