# CASTELNAVET

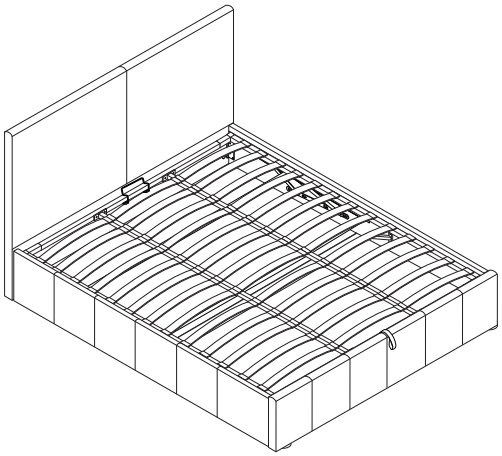

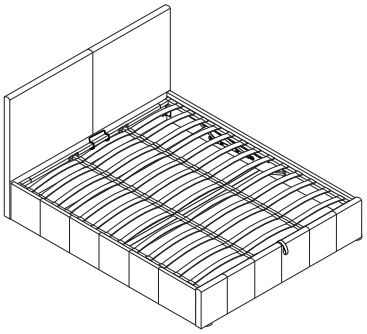

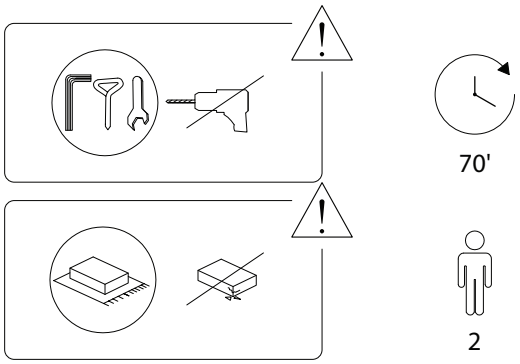


1/15



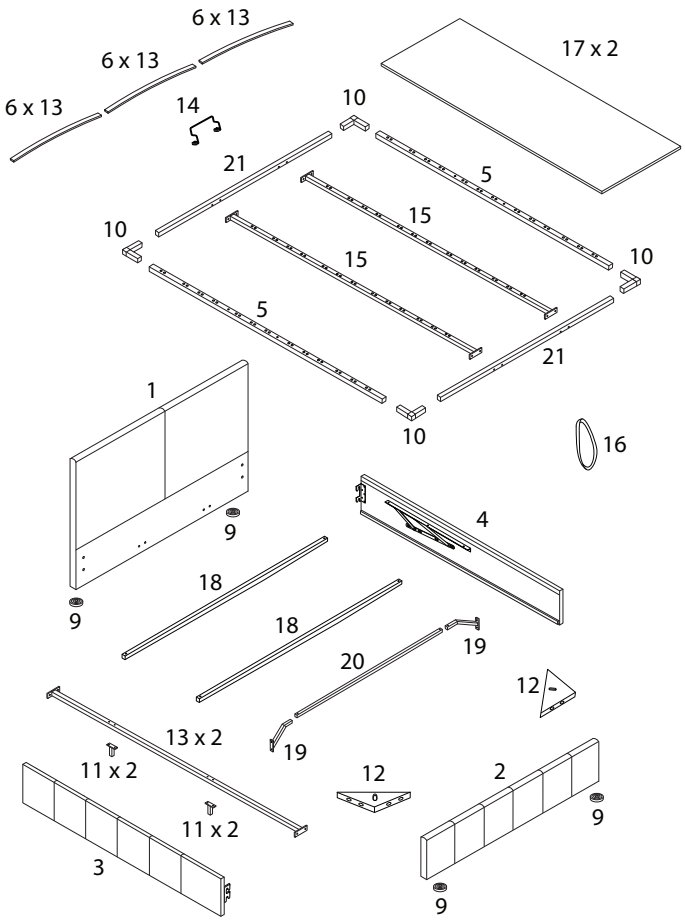


2/15



| | | | |
|---|---|---|---|
| 1 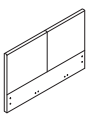 x 1 | 2 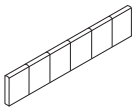 x 1 | 3 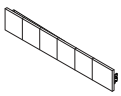 x 1 | 4 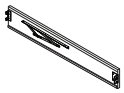 x 1 |
| 5  x 2 | 6 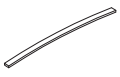 x 39 | 7 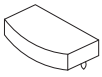 x 26 | 8 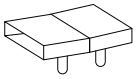 x 26 |
| 9  x 4 | 10 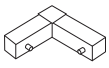 x 4 | 11  x 4 | 12 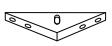 x 2 |
| 13 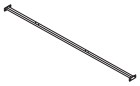 x 2 | 14  x 1 | 15  x 2 | 16  x 1 |
| 17 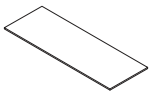 x 2 | 18 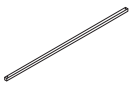 x 2 | 19  x 2 | 20 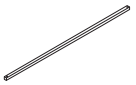 x 1 |

3/15

| 21 | A |
|---|---|
| 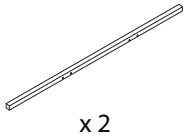 |  |
| x 2 | x 28 |

| B | C | D |
|---|---|---|
|  |  |  |
| x 18 | x 22 | x 8 |

| E | F | G |
|---|---|---|
|  |  |  |
| x 8 | x 1 | x 1 |

| H | I1 | I2 |
|---|---|---|
|  |  |  |
| x 2 | x 2 | x 2 |

| J | K | L |
|---|---|---|
| 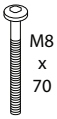 |  |  |
| x 4 | x 1 | x 4 |



2057/CASTELNAVET/300425/

!

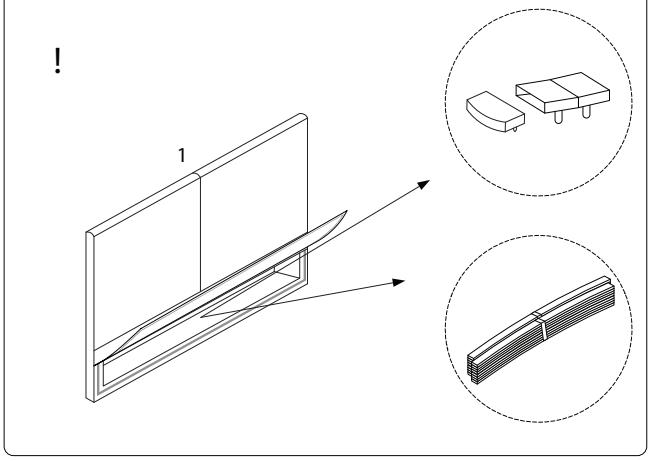


1

| 1 | 2 | 9 | K | L |
|---|---|---|---|---|
|  |  |  |  |  |
| x 1 | x 1 | x 4 | x 1 | x 4 |

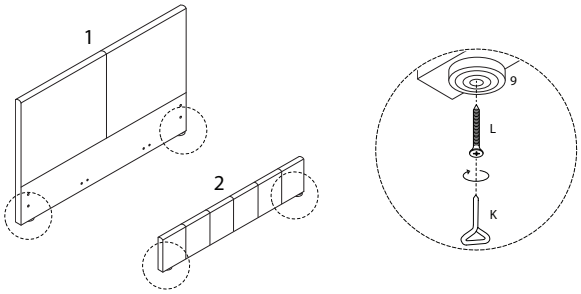




2057/CASTELNAVET/300425/

2

| A | D | E | F |
|---|---|---|---|
|  |  |  |  |
| x 8 | x 8 | x 8 | x 1 |

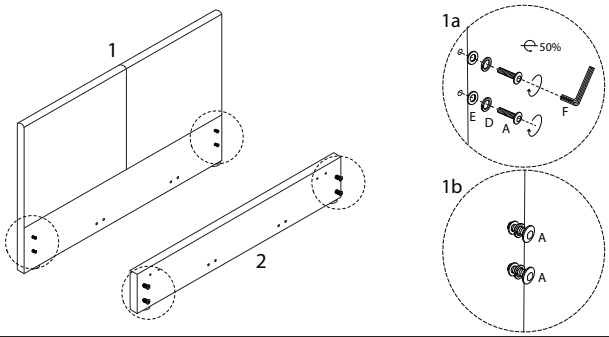


4

| 12 | A | F |
|---|---|---|
| 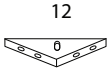 |  |  |
| x 2 | x 8 | x 1 |

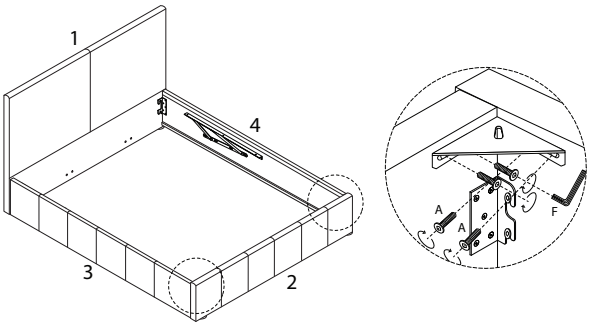


3

| 3 | 4 | F |
|---|---|---|
|  |  |  |
| x 1 | x 1 | x 1 |

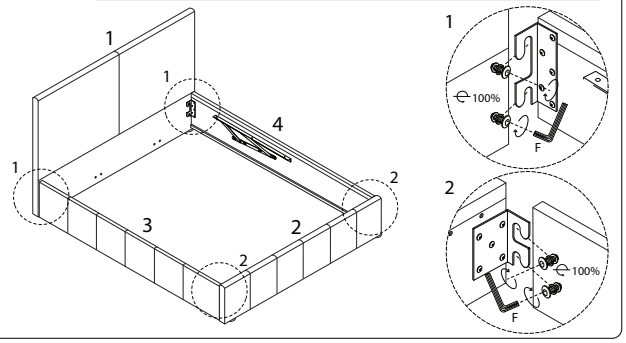


5 x 2

| 11 | 13 | B | C | F | G |
|---|---|---|---|---|---|
|  |  |  |  |  |  |
| x 2 | x 1 | x 4 | x 4 | x 1 | x 1 |






2057/CASTELNAVET/300425/



2057/CASTELNAVET/300425/

## 6

| A | F |
|---|---|
| M8 x 30 | M5 |
| x 8 | x 1 |

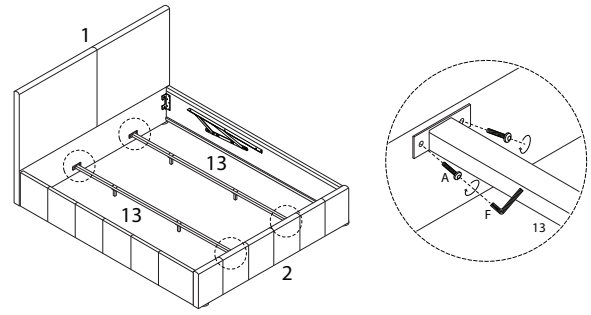


## 8

| A | F |
|---|---|
| M8 x 30 | M5 |
| x 4 | x 1 |

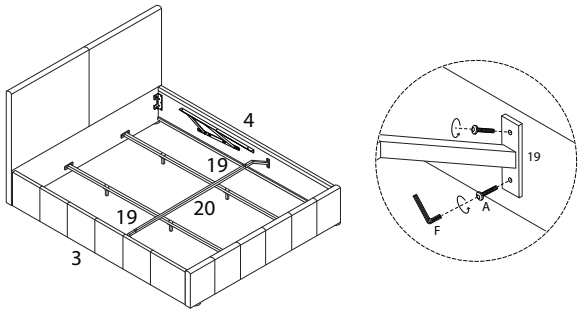


## 7

| 19 | 20 | H | $l_1$ | $l_2$ |
|---|---|---|---|---|
| | | M4 | M6 x 20 | M6 x 20 |
| x 2 | x 1 | x 2 | x 2 | x 2 |

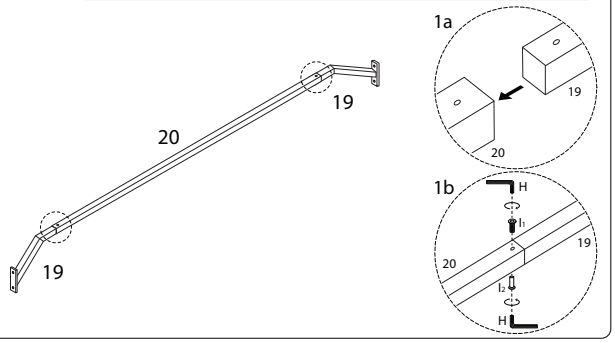


## 9

| 17 |
|---|
| x 2 |

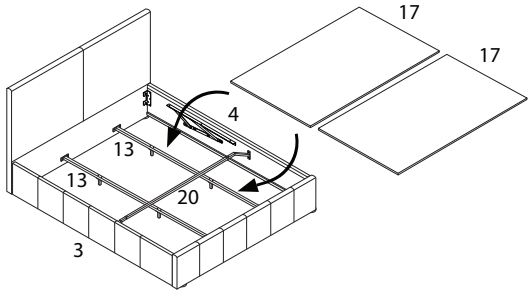










## 10

| 5 | 10 | 21 |
|---|---|---|
| x 2 | x 4 | x 2 |

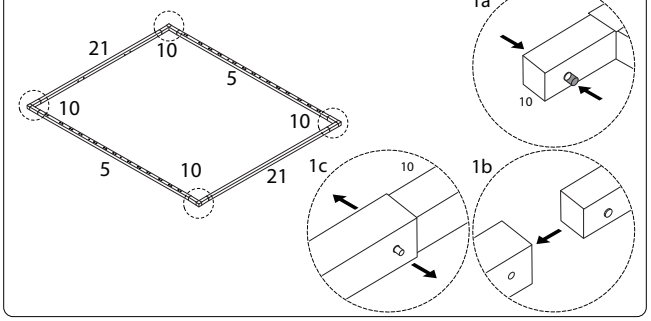


## 12

| 14 |
|---|
| x 1 |

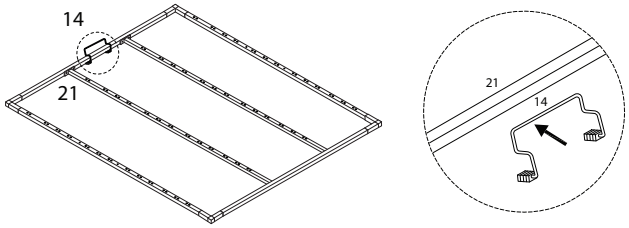


## 11

| 15 | B | C | F | G |
|---|---|---|---|---|
| | M8 x 40 | | M5 | |
| x 2 | x 8 | x 8 | x 1 | x 1 |

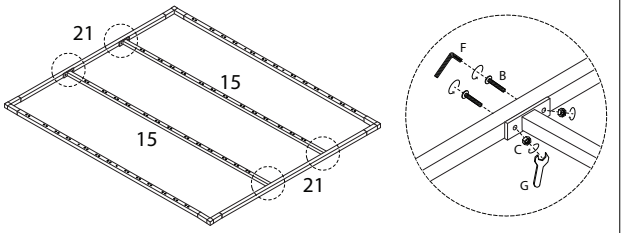


## 13

| 16 |
|---|
| x 1 |

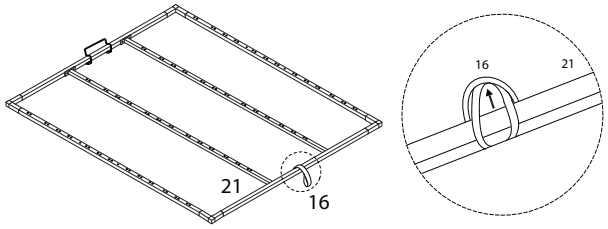

14

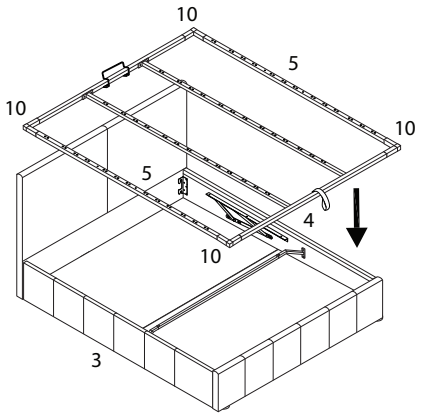


16

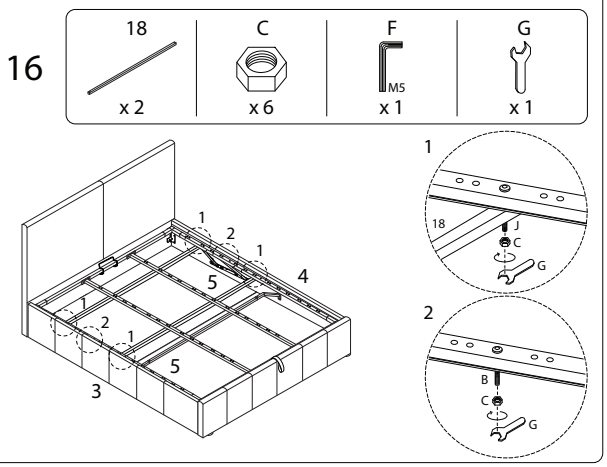


15

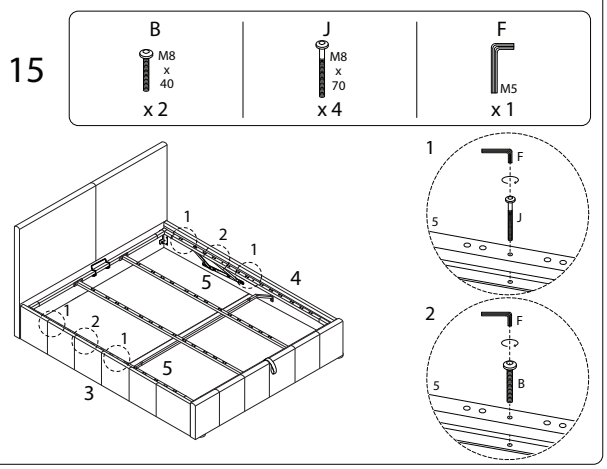


17

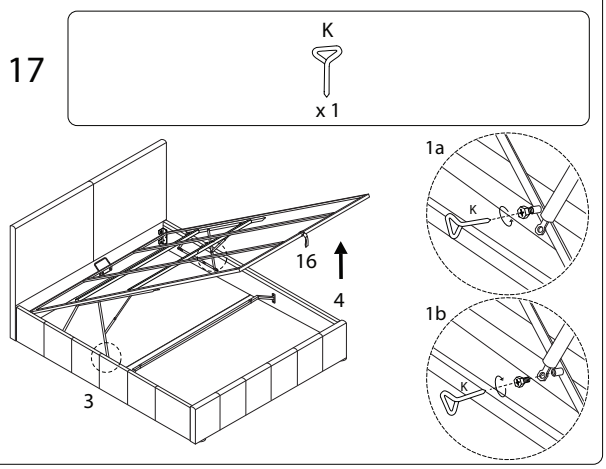










18 x 13

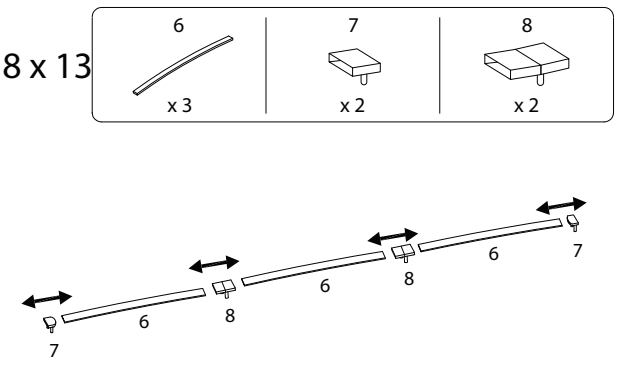


19

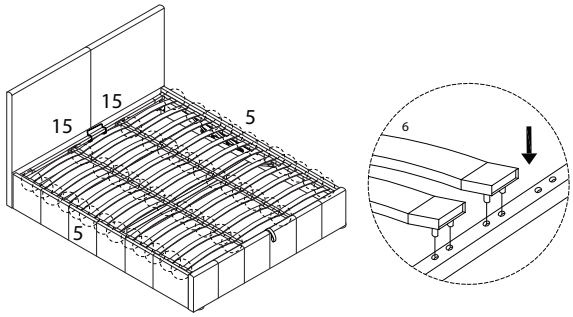


!

