Thermostatic Shower Mixer
Installation Manual

W-134(ES)

Warranty Duration

All components of this faucet system are covered under a lifetime limited warranty, ensuring they are free from defects in material and workmanship for the original purchaser.

Repair and Replacement

If the product shows defects in material or workmanship under normal use and within the warranty period, we will, at our discretion, either repair the product or provide a replacement at no cost to the original purchaser. Please note that proof of purchase (e.g., an invoice) is required when requesting service. The warranty does not cover damages caused by improper installation, misuse, or modifications.

Exclusions

We shall not be responsible for the following cases:

- Damage to the product caused by improper installation, misuse, unauthorized repair or replacement, or abuse (including damage during shipment).
- Damage to the product caused by improper dismantling after installation.
- Damage resulting from abnormal water pressure or impurities in water pipes, which is not covered under this warranty.
- Rust on the product due to insufficient care and maintenance, which is not covered under this warranty.
- Damage caused by natural disasters such as fire, flood, earthquake, lightning storms, etc., which is not covered under this warranty.

I hope this helps! If you have any further questions or concerns,please let me know.

Having Trouble? Contact us.

Email: info@faucetsupport.com

Toll Free: UK:+44 808 304 9999
EU:+49 941 7508 3032



M8649-G1/2
SFS-1288

CONTENT

1.(EN) Two-function Rain Shower System ---------- (1-6)
2.(DE) Zweifunktions-Duschsystem mit Regendusche ----------(7-12)
3.(FR) Système de douche pluie à deux fonctions ---------- (13-18)
4.(ES) Sistema de ducha tipo lluvia de dos funciones ----------(19-24)
5.(IT) Sistema doccia a pioggia a due funzioni ----------(25-30)

EN

Installation and Maintenance Matters

1.Check the accessories list to verify that all parts are complete in this package.

2.Do not disassemble the main body by yourself.

3.Connect inlet pipes to supply valves.

4.Make sure inlet pipes and supply valves have no impurities and are cleaned, with no impurities in the pipeline.

5.After installation, check all joints for leakages.

6.Do not leave the rain shower system exposed to a severely corrosive environment.



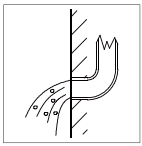





Do's

1.In order to keep the mixer surface bright, please clean the mixer regularly.

2.Rinse the faucet with clean water and wipe it with a soft cotton cloth.

3.Use one of the following cleaners to remove dirt from the surface: a. Mild liquid cleaner. b. Colorless glass cleaner and powder cleaner that do not cause abrasion and can be dissolved completely. c. Polish liquid that does not cause abrasion.

Don'ts

a. Avoid using cleaning powder, harsh cleaning chemicals, brushes and coarse cloth to prevent scratching and friction.

b. Do not use acid cleaners to clean the faucet as they may cause surface corrosion of the faucet. If the faucet is exposed to harmful acid substances, please rinse it immediately with water.

Tools Needed:

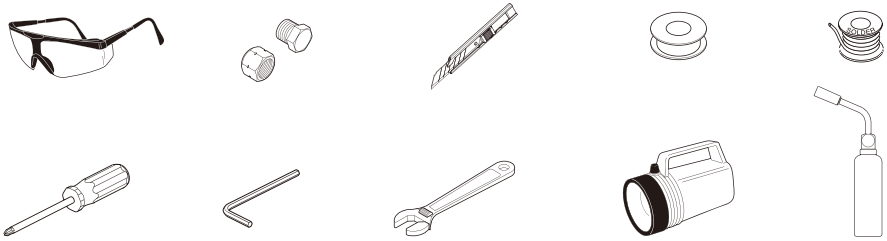

Single Function Shower Mixer
Accessories List

EN

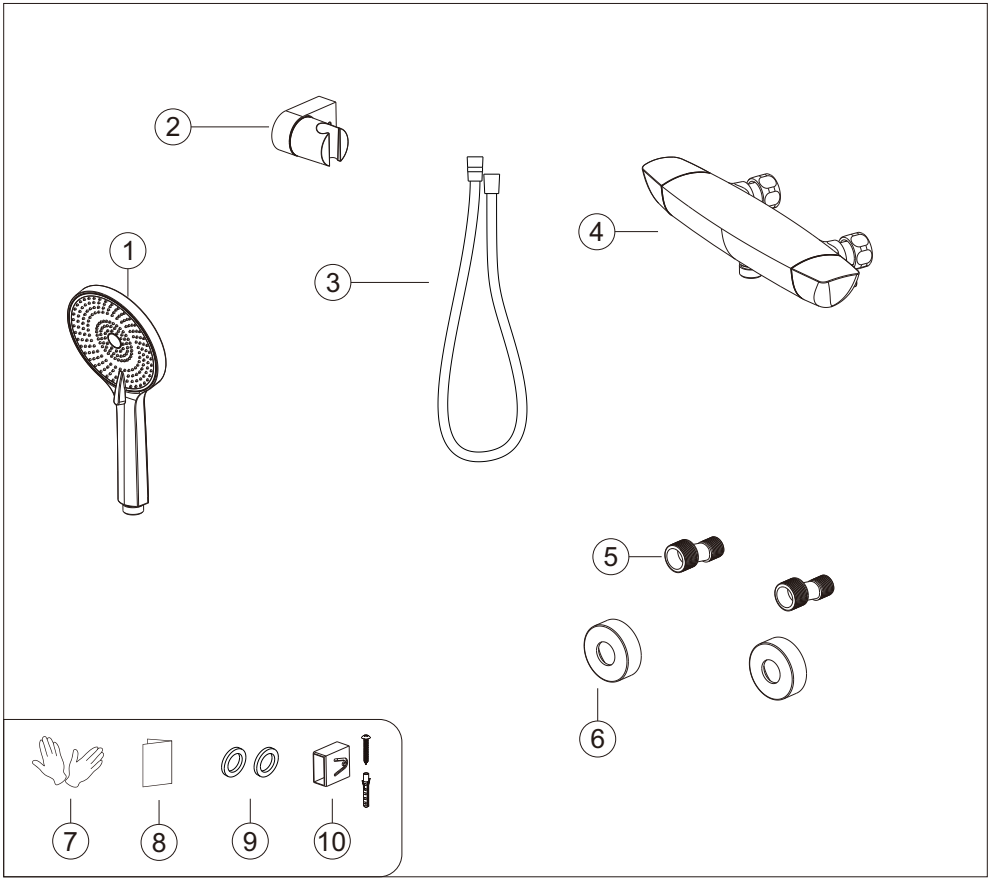

No.	Part name	Qty	No.	Part name	Qty
1	Hand shower	1	6	Angled connector flange	2
2	Hand shower holder	1	7	Gloves	1
3	Shower hose	1	8	Instruction manual	1
4	Main body	1	9	Rubber gasket	2
5	Angled connector	2	10	Shower holder parts	1set

EN

◆ Essential Dimensions & Water Pipe Line

Unit: mm/inch

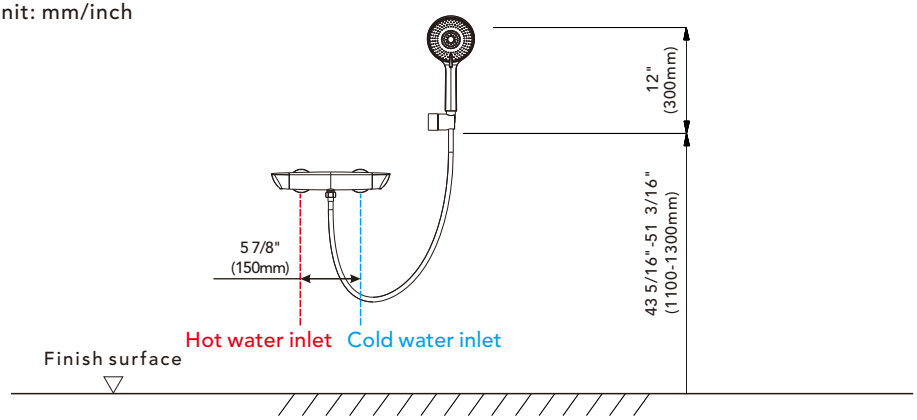

◆ The Installation Depth of Angled Connector

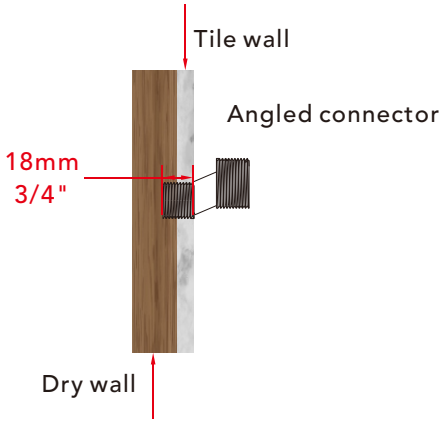

The thickness of the tile must be calculated for installation.
Connector size of male thread: USA: 1/2"-14NPT, Canada: 1/2"-14NPT, Europe: G1/2".

◆ Main Body Installation

Step 1

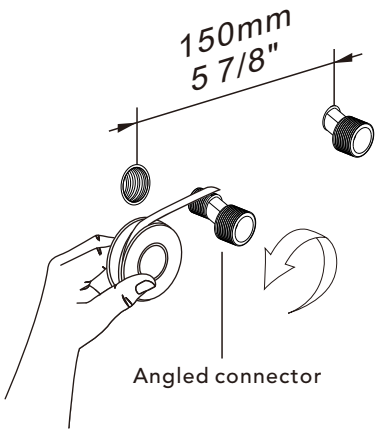

After wrapping the thread seal tape, connect the angled connector to the water outlet. The distance between the hot and cold water outlets should be 150 mm (5 7/8"), and the installation height from the floor should be adjusted according to the bathtub height.

Step 2

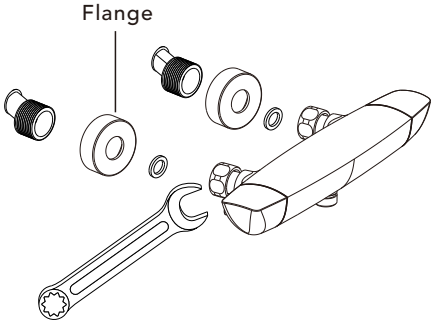

Screw the flange onto the angled connector. Then, install the main body onto the angled connector and tighten it with a wrench.
(Note: It is recommended to wrap tape around the spanner to prevent scratching the product surface.)

EN

◆ Main Body Installation

Step 3 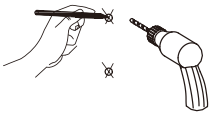 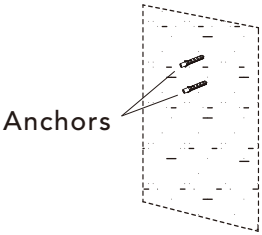	After marking the screw hole positions for the shower holder base on the concrete wall (For wooden walls, simply screw in the screws directly.), drill the holes using a suitable tool and insert the expansion anchors.
Step 4  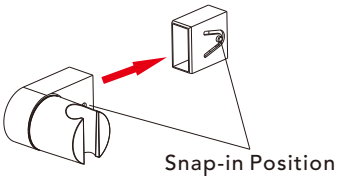	1. Fix the shower holder base to the wall with screws in the direction shown in the illustration, making sure to align it with the pre-drilled screw holes. 2. Align the shower holder with the snap-in position, and install it onto the base in the direction shown in the illustration.

◆ Hand Shower Installation

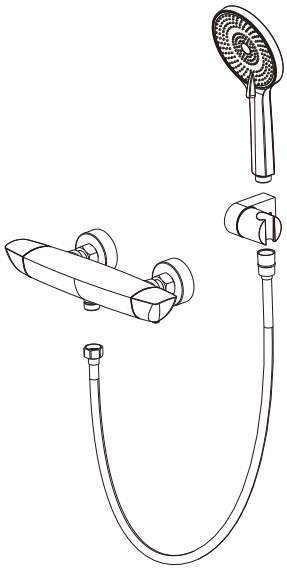	As shown in the figure, connect the shower hose to the lower outlet of the main body and tighten it securely. Turn on the water to check for any leaks at the connection point.
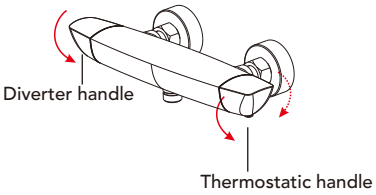	1. Rotate the diverter handle (the left handle when facing the outlet) clockwise or counterclockwise to switch between different water outlets. 2.Rotate the thermostatic handle (the right handle when facing the outlet) clockwise or counterclockwise to turn on cold water or switch to hot water.