RUMSON

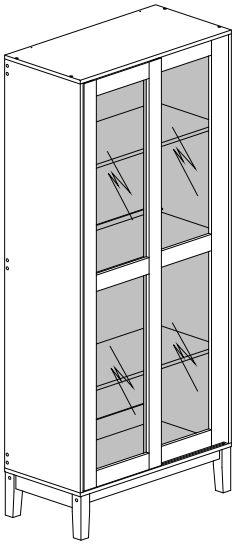

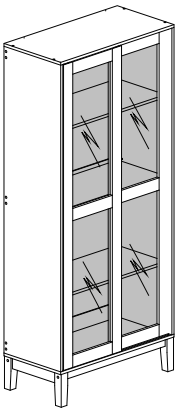

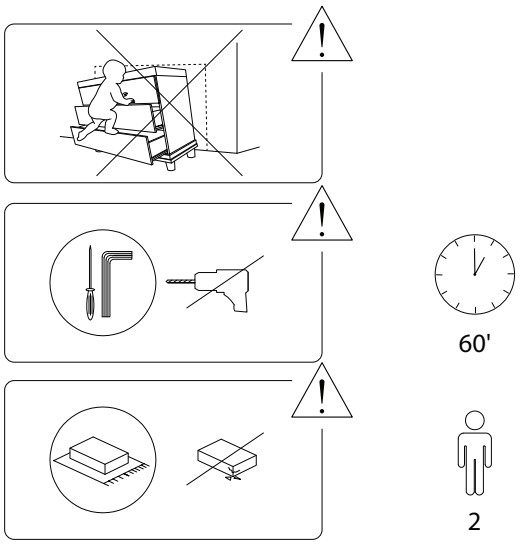
60'
2

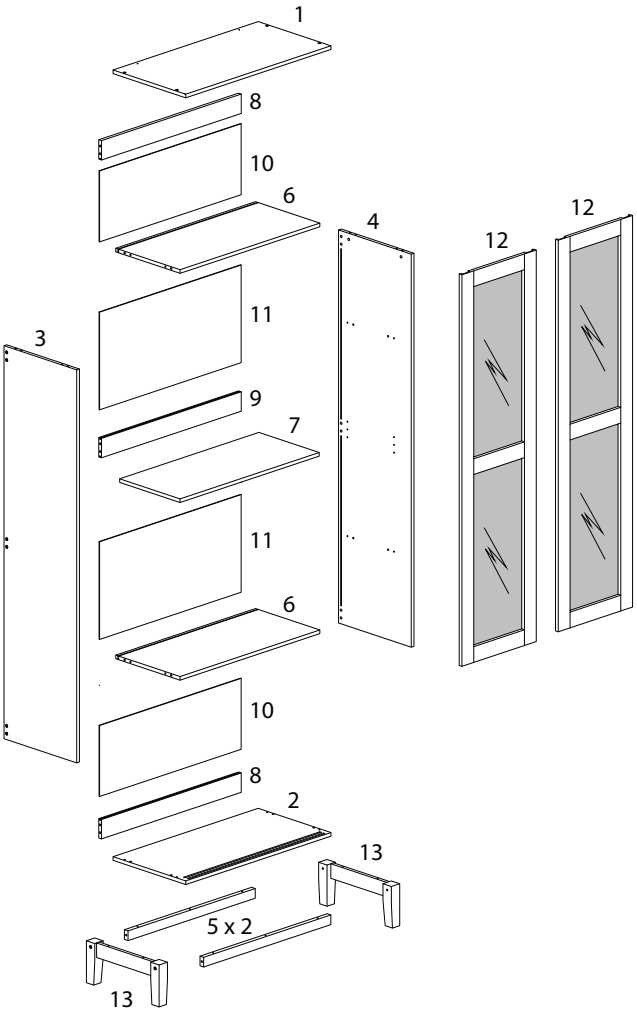
1
8
10
6
4
12
12
3
11
9
7
11
6
10
8
2
13
5 x 2
13

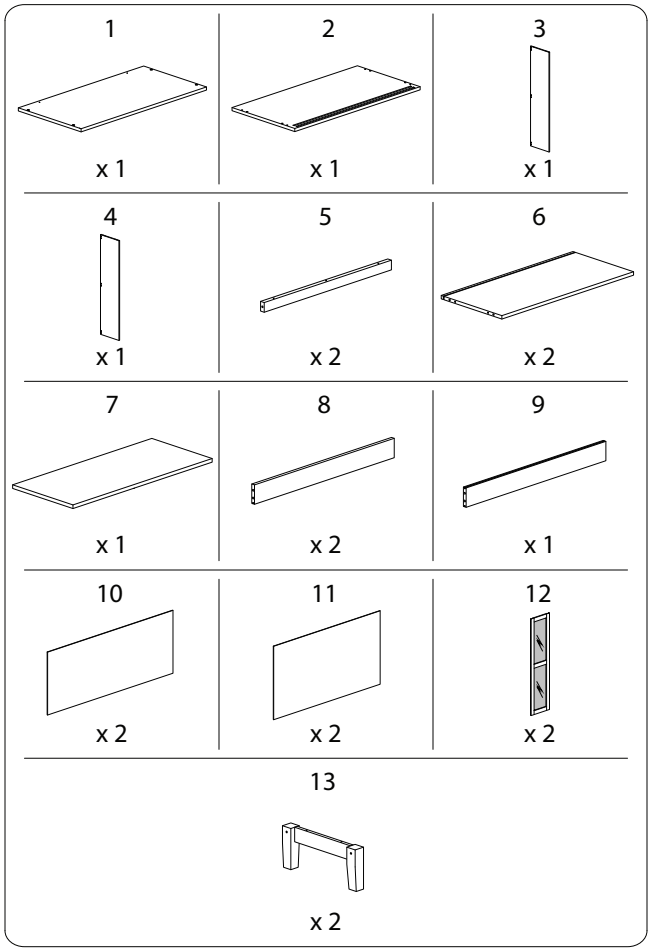
1
x 1
2
x 1
3
x 1
4
x 1
5
x 2
6
x 2
7
x 1
8
x 2
9
x 1
10
x 2
11
x 2
12
x 2
13
x 2

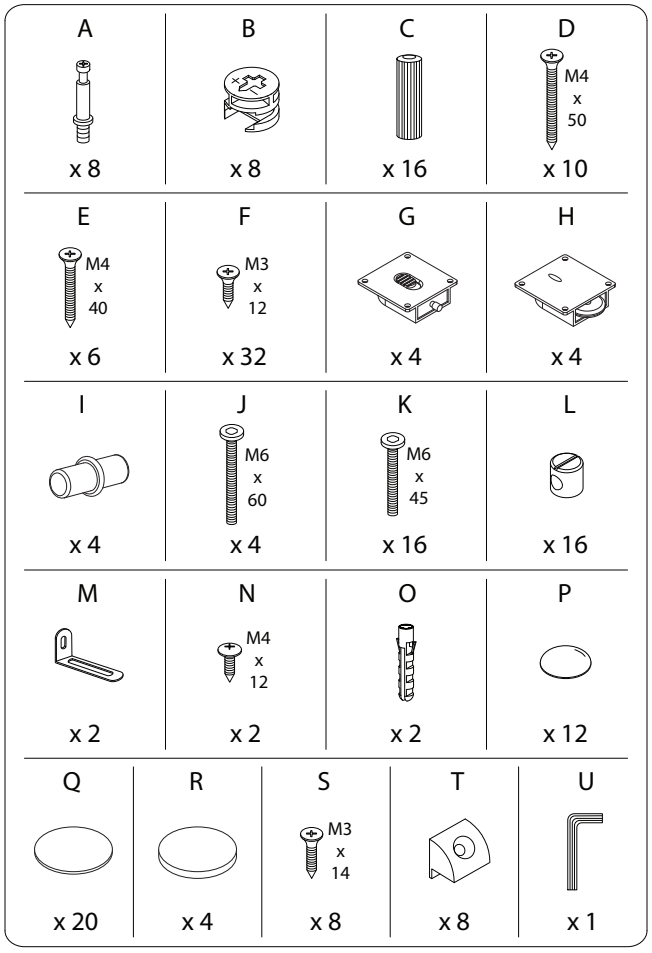
A
x 8
B
x 8
C
x 16
D
M4 x 50
x 10
E
M4 x 40
x 6
F
M3 x 12
x 32
G
x 4
H
x 4
I
x 4
J
M6 x 60
x 4
K
M6 x 45
x 16
L
x 16
M
x 2
N
M4 x 12
x 2
O
x 2
P
x 12
Q
x 20
R
x 4
S
M3 x 14
x 8
T
x 8
U
x 1

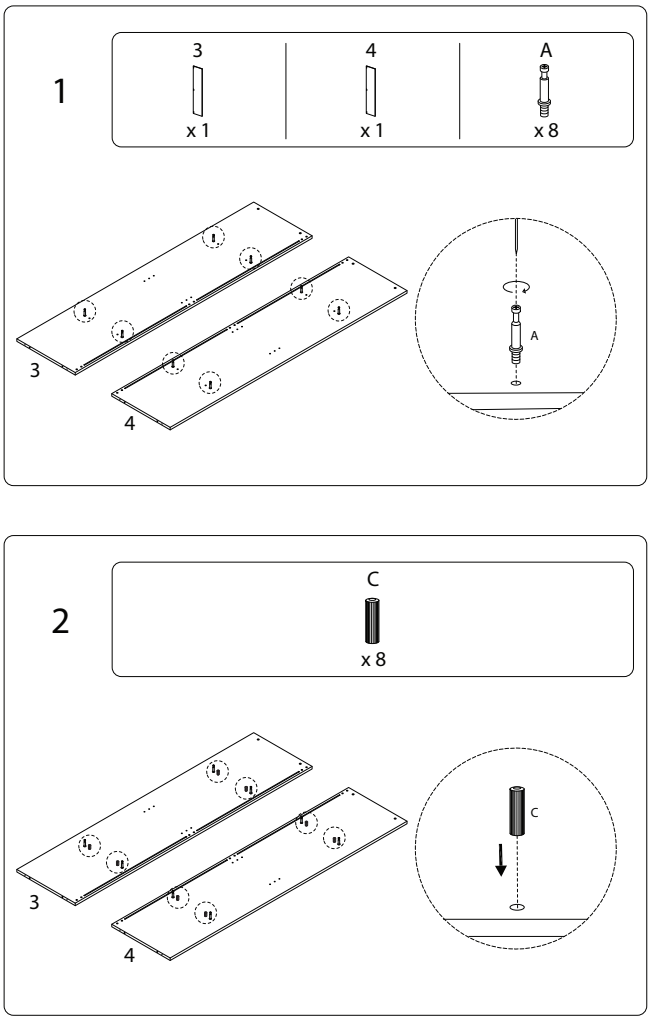
1
3
x 1
4
x 1
A
x 8
3
4
A
2
C
x 8
3
4
C

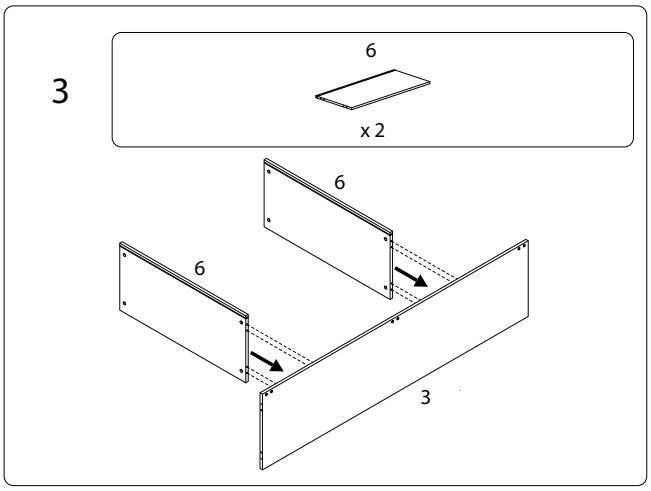
3
6
x 2
6
6
3

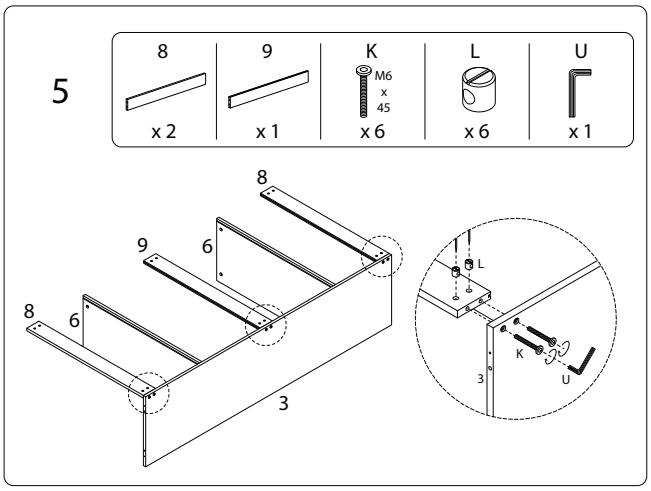
5
8
x 2
9
x 1
K
M6 x 45
x 6
L
x 6
U
x 1
8
9
6
8
6
3
L
K
U
3

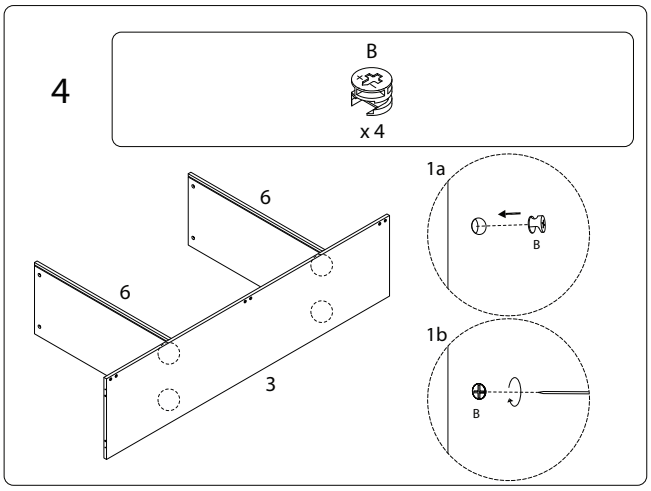
4
B
x 4
6
6
3
1a
B
1b
B

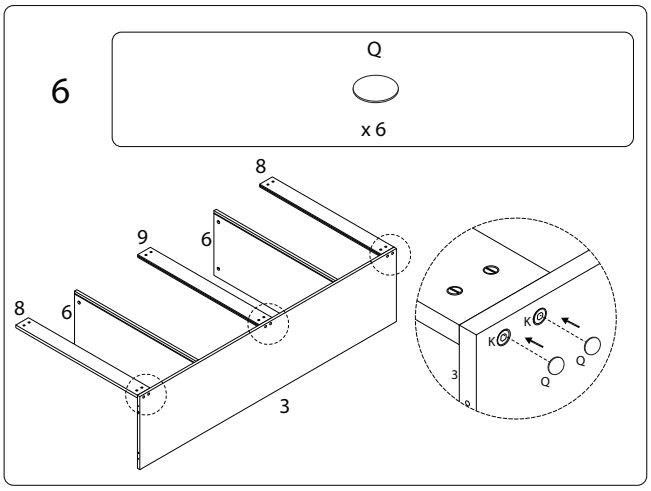
6
Q
x 6
8
9
6
8
6
3
K
K
Q
Q
3

7

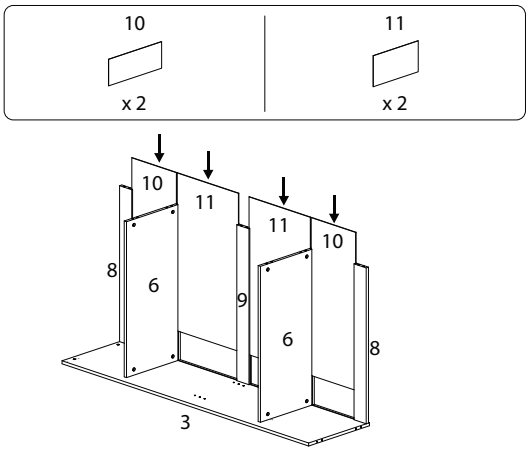

8

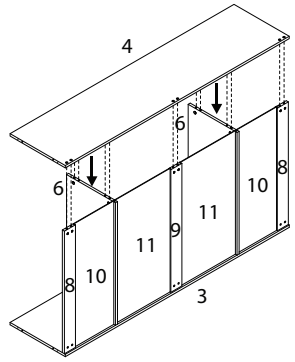

9

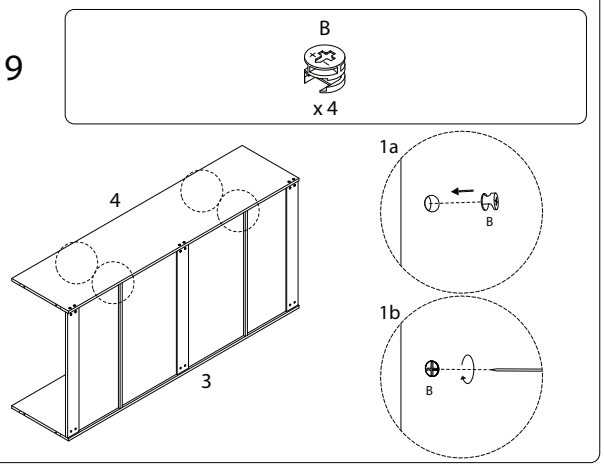

10

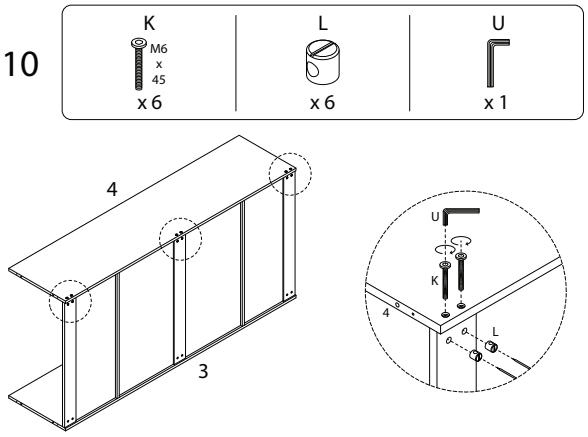

11

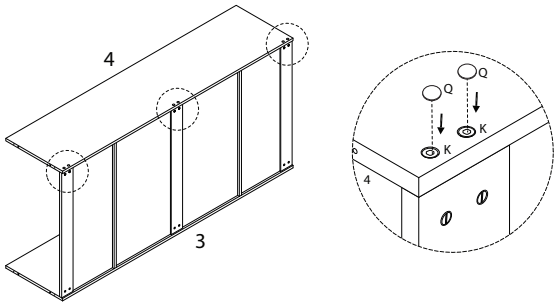

12

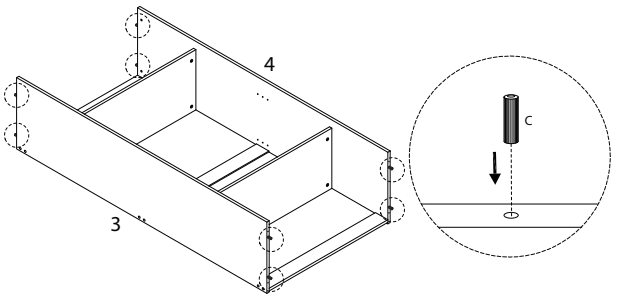

13

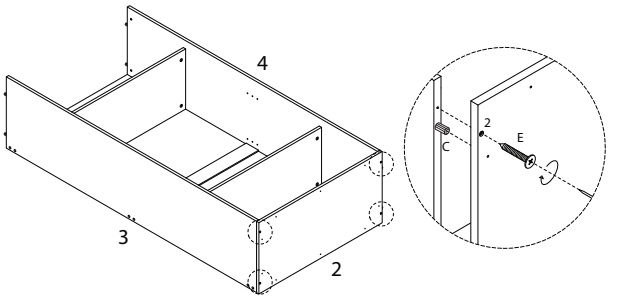

14

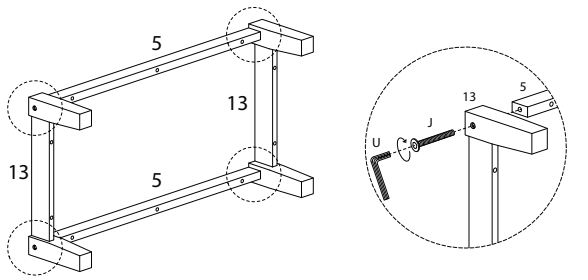

15

Q
x 4

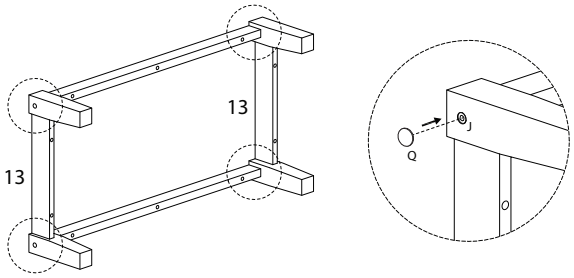

16

R
x 4

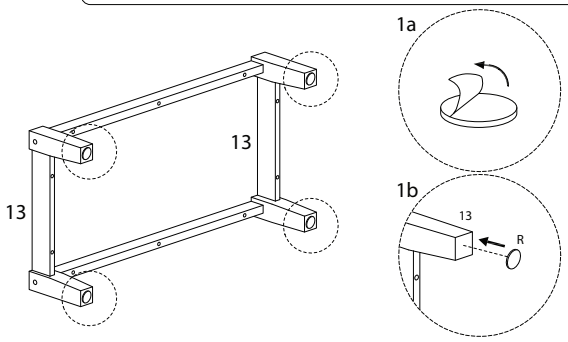

17

D
M4 x 50
x 10

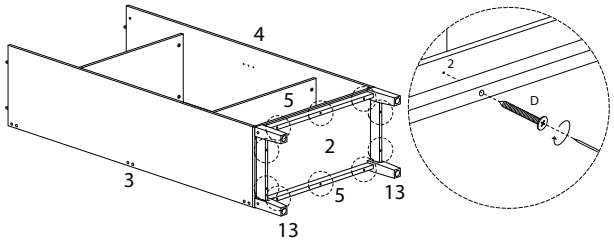

18

1	M	N
x 1	x 2	M4 x 12
		x 2

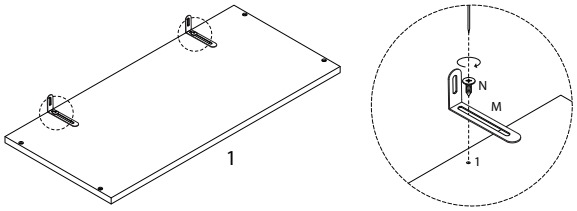

19

K	L	Q	U
M6 x 45			
x 4	x 4	x 4	x 1

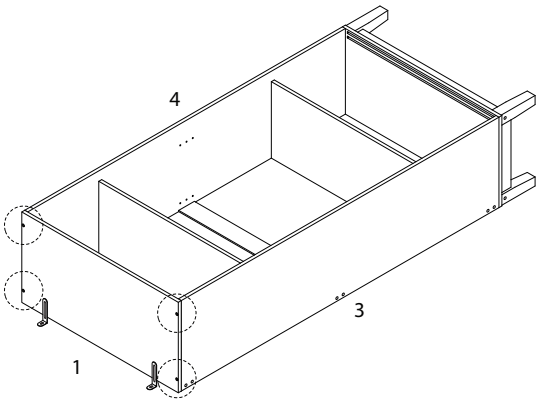

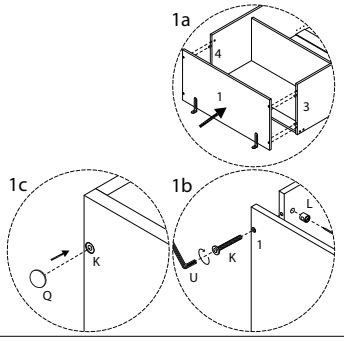

20 x 2

12	F	G	H	P
	M3 x 12			
x 1	x 16	x 2	x 2	x 6

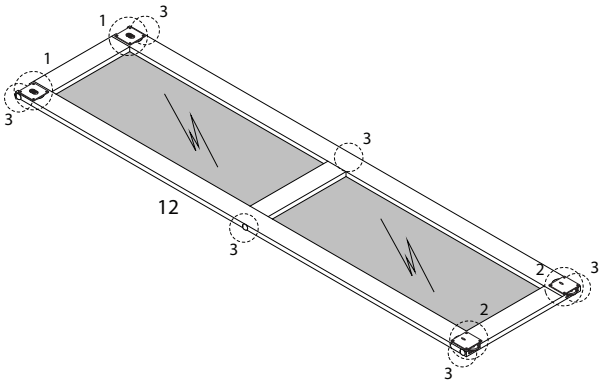

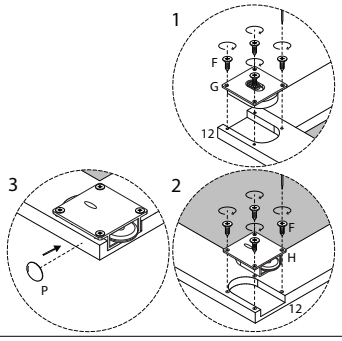

21

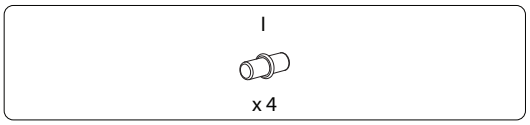

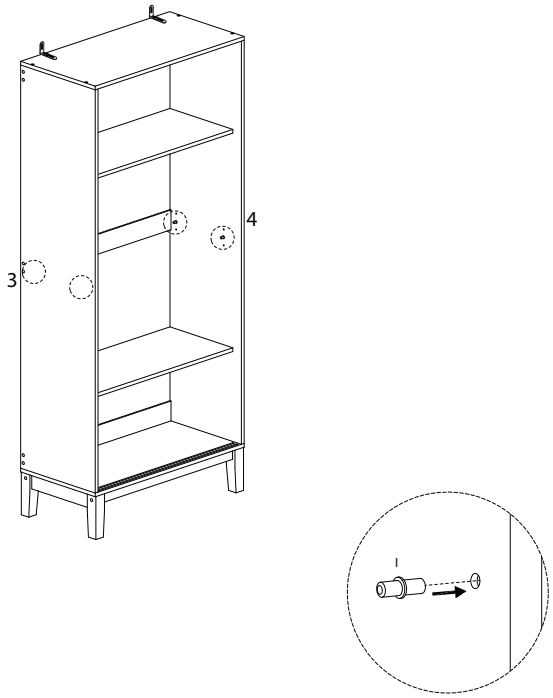

22

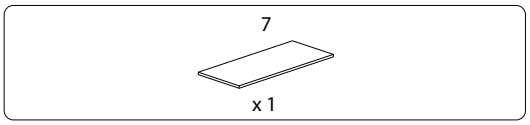

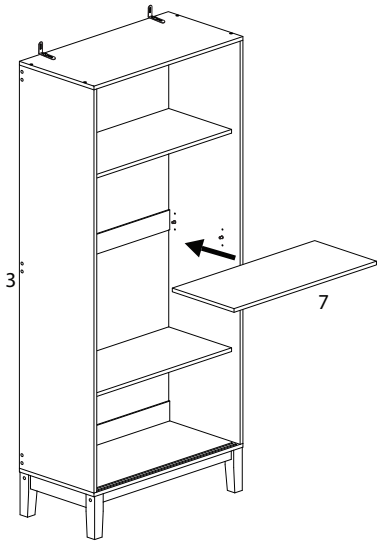

23

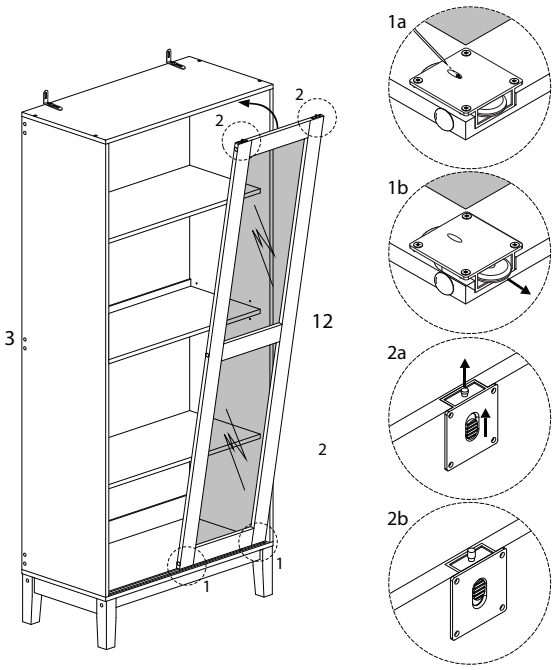

24

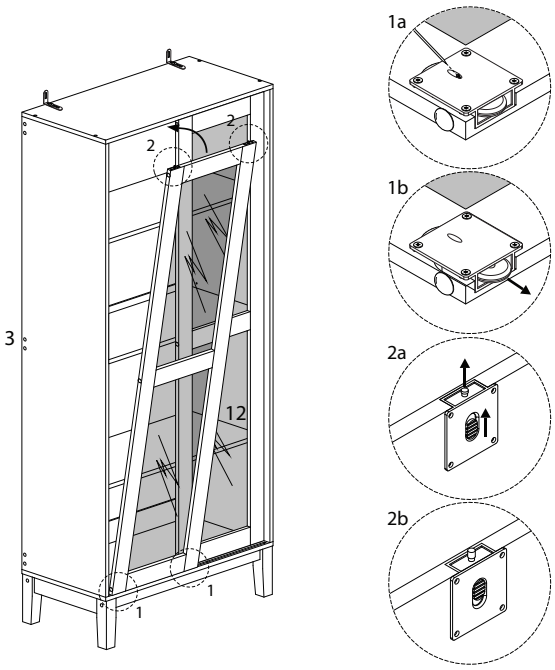

25

S	T
M3 x 14	
x 8	x 8

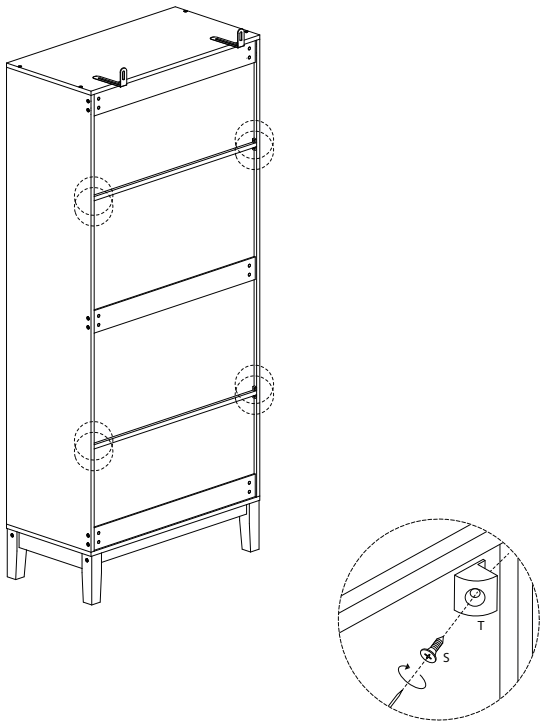

26
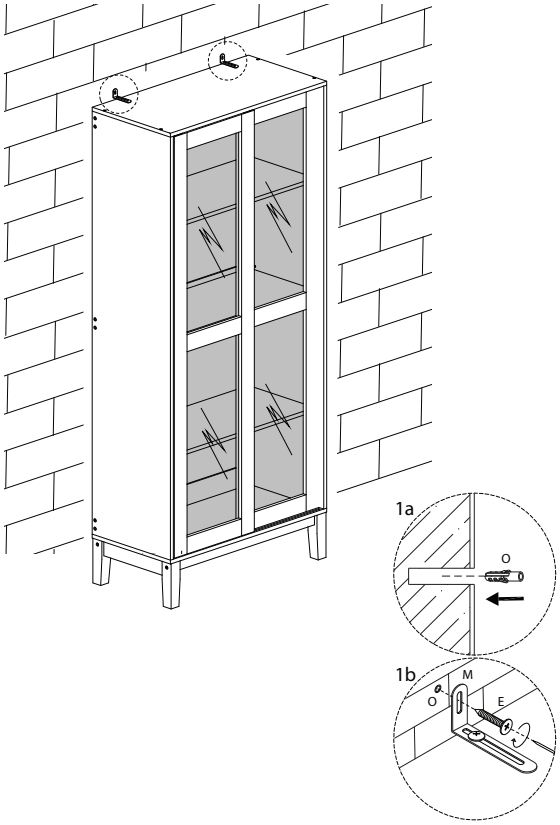
E	O
M4 x 35	
x 2	x 2