MANCORA

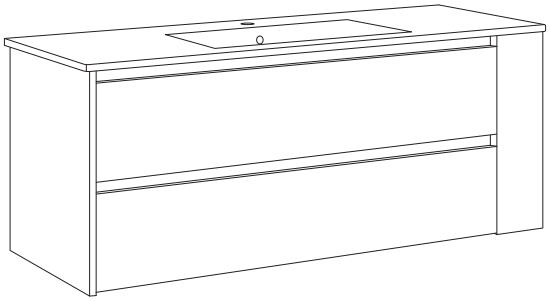

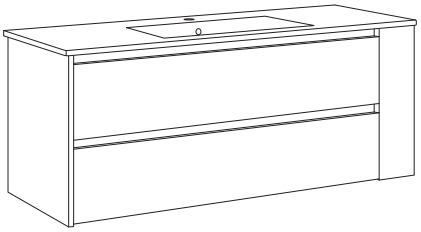

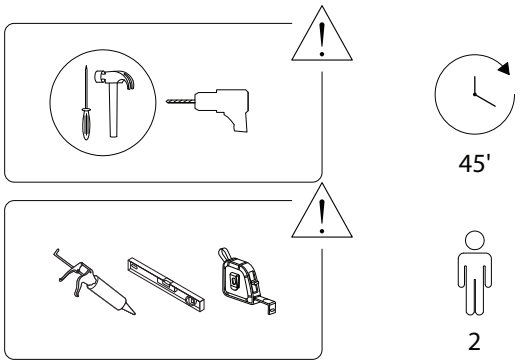

1/16

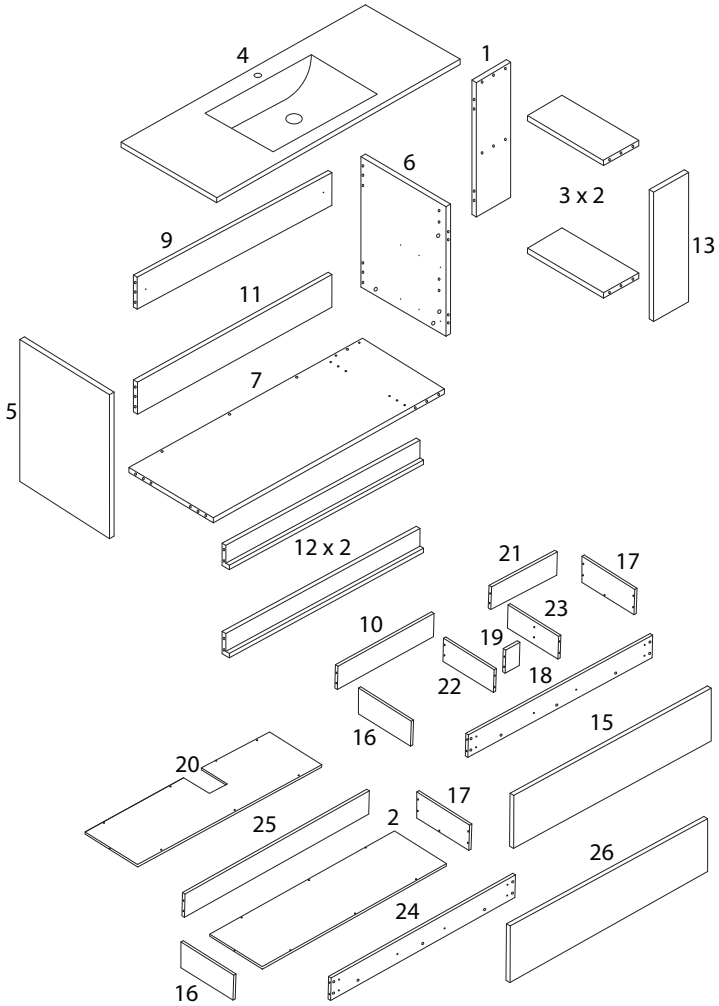

2/16

1	2	3	4	
x 1	x 1	x 2	x 1	
5	6	7	9	10
x 1	x 1	x 1	x 1	x 1
11	12	13	15	16
x 1	x 1	x 1	x 1	x 1
17	18	19	20	21
x 2	x 2	x 1	x 1	x 1
22	23	24	25	26
x 1	x 1	x 1	x 1	x 1

3/16

N1	N2	N4
		
x 78	x 78	x 28
N7L	**N7R**	**N10**
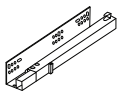	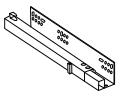	 M4 x 14
x 2	x 2	x 32
N11	**N12**	**N13A**
 M4 x 25	 M6 x 25	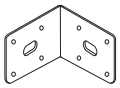
x 8	x 4	x 2
N13B		**N13C**
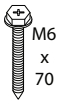 M6 x 70		
x 2		x 2

1

1	5	6	7	13	N1
x 1	x 1	x 1	x 1	x 1	x 33

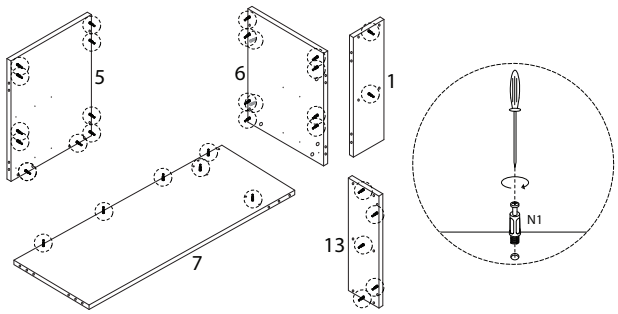

2

3	9	11	N4
x 2	x 1	x 1	x 28

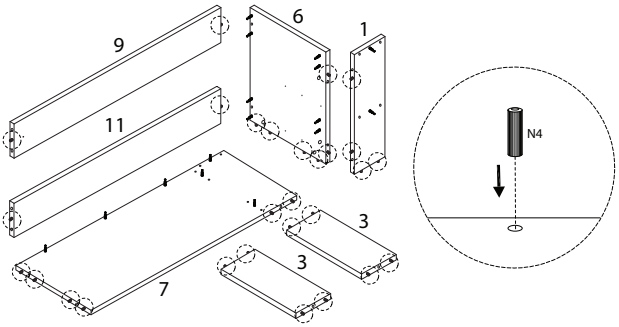

3

12	B
x 2	x 10

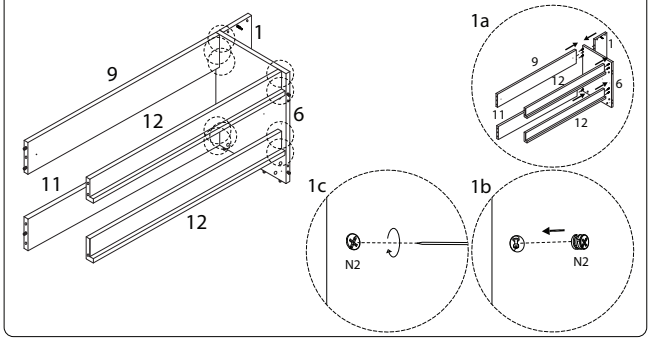

5

B
x 12

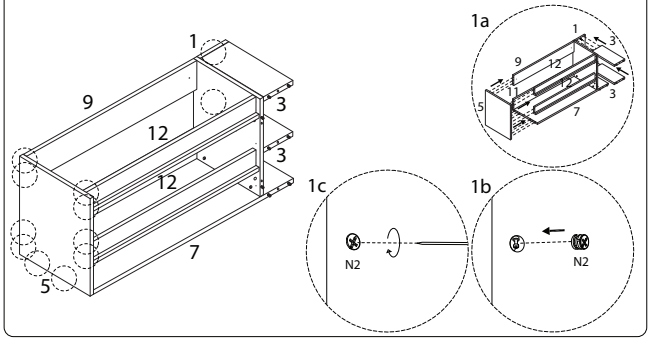

4

B
x 6

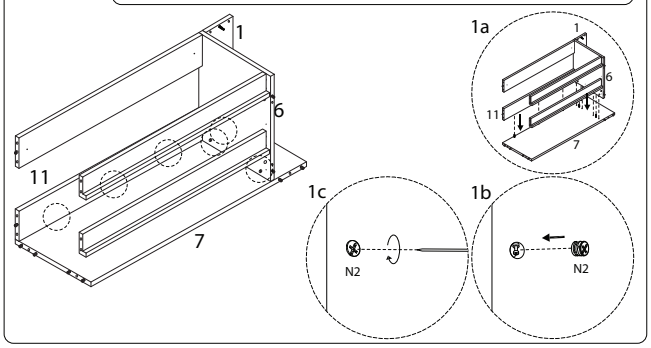

6

B
x 5

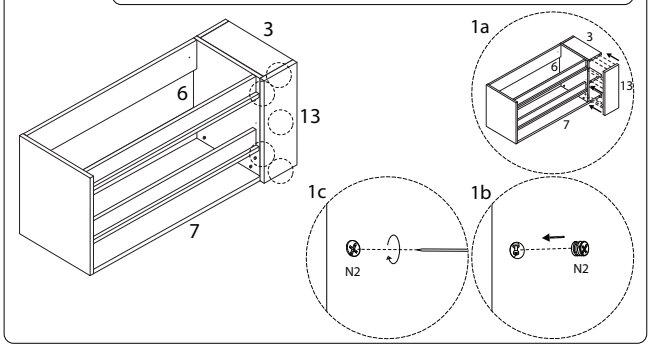

7

$N7_R$	N10
x 2	x 6

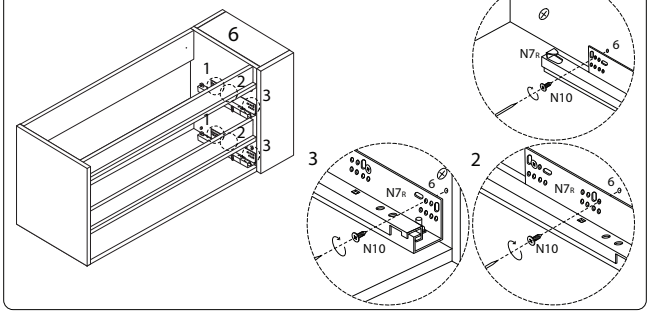

8

$N7_L$	N10
x 2	x 6

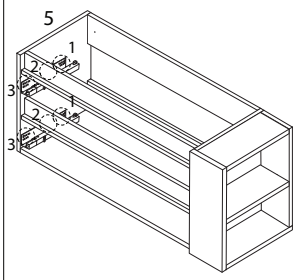

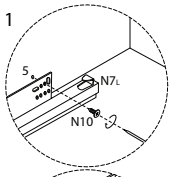

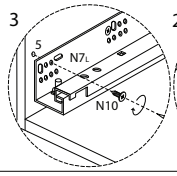

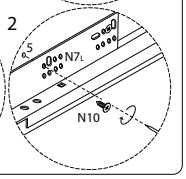

9

2	16	17	18	20	22	23	N1
x 1	x 2	x 2	x 1	x 1	x 1	x 1	x 45

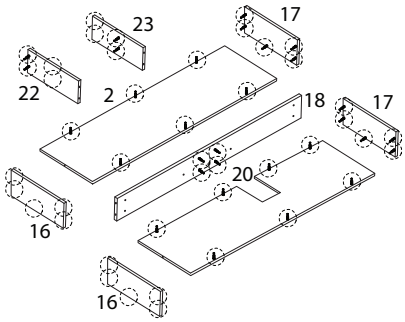

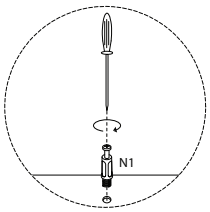

10

19	N2
x 1	x 4

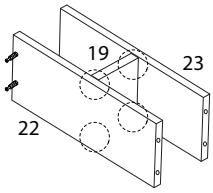

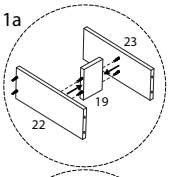

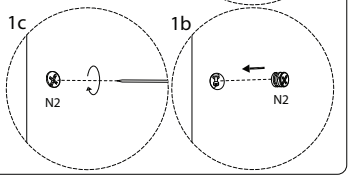

11

10	21	N2
x 1	x 1	x 8

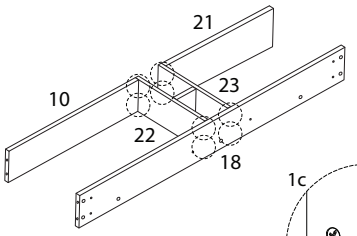

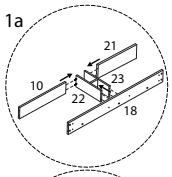

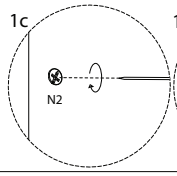

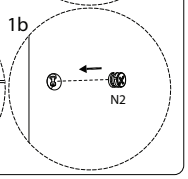

13

N2
x 10

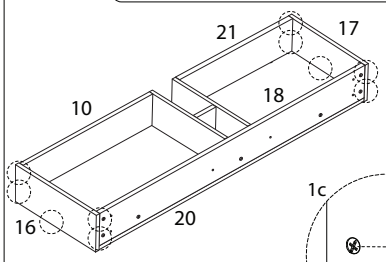

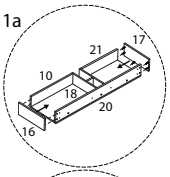

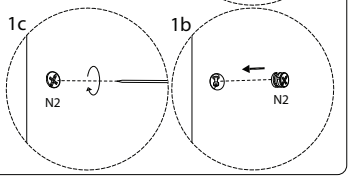

12

N2
x 7

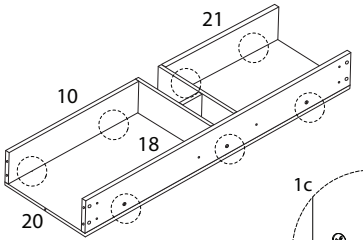

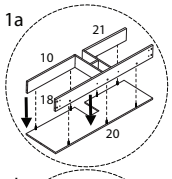

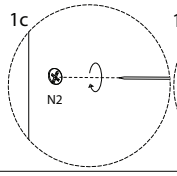

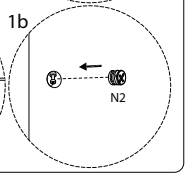

14

24	25	N2
x 1	x 1	x 6

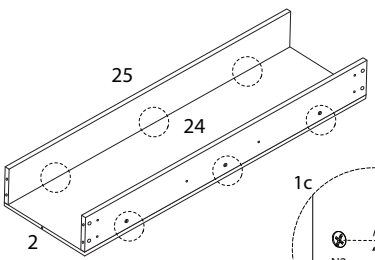

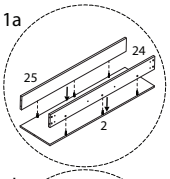

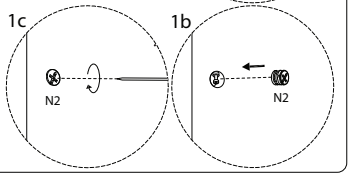

16

N2

x 10

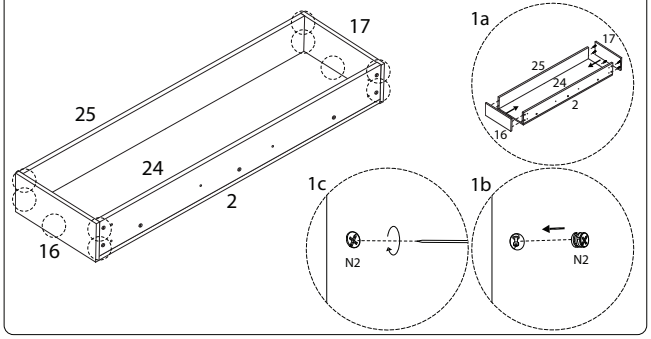

17

15

x 1

26

x 1

N12

M6 x 25

x 4

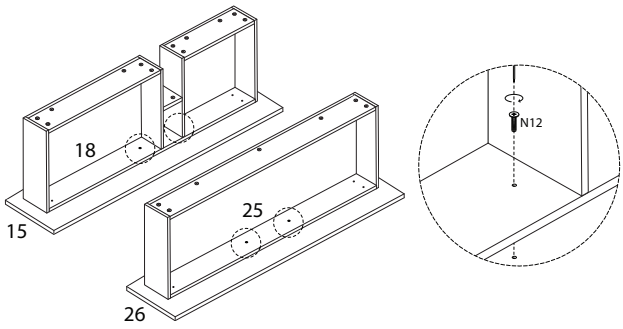

18

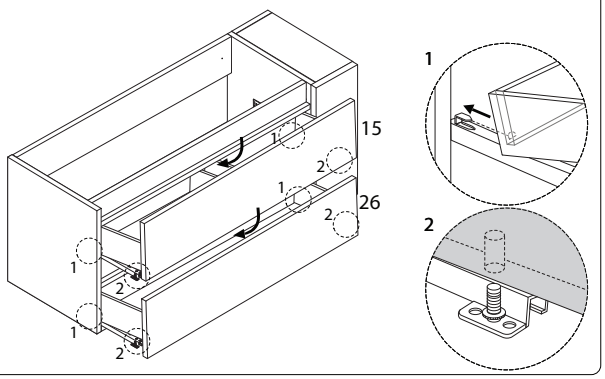

19

N10

M4 x 14

x 4

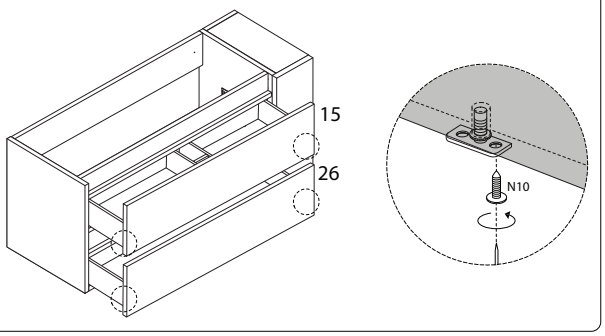

20

N11

M4 x 25

x 8

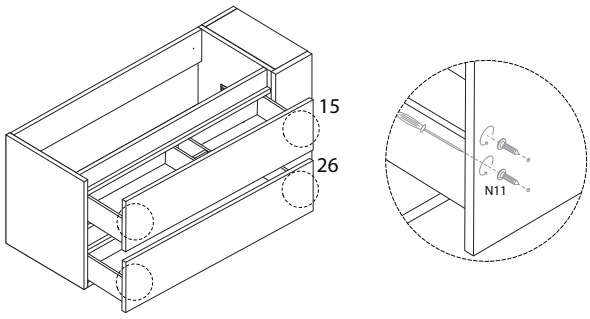

20

N13B

M6 x 70

x 2

N13C

x 2

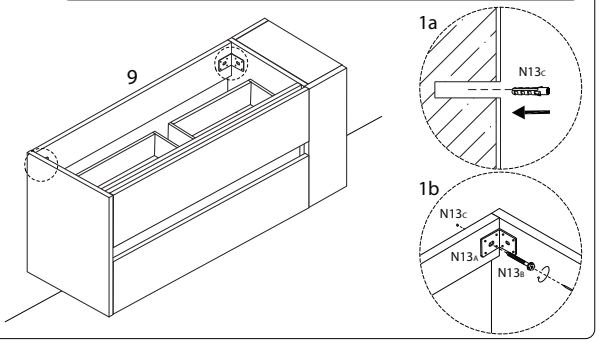

21

N10

M4 x 14

x 16

N13A

x 2

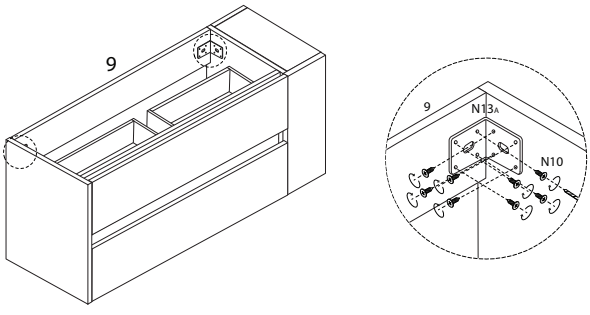

21

4

x 1

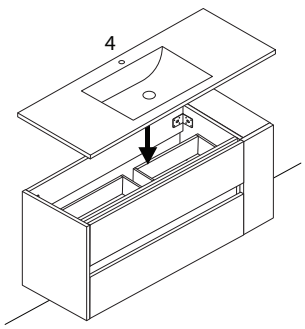

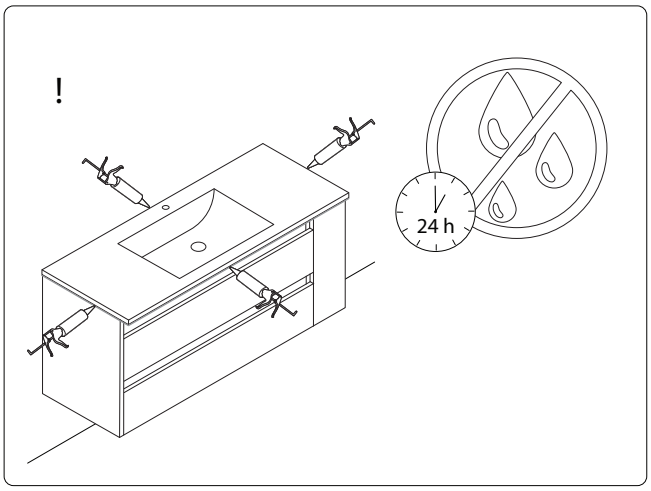

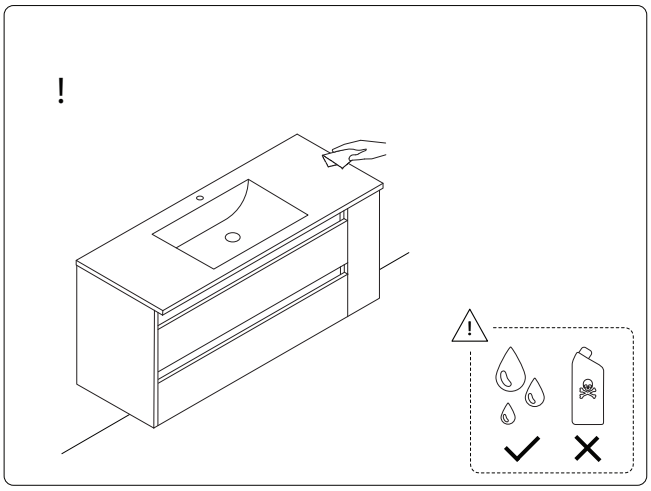

2353/MANCORA/150925/