LEDUC

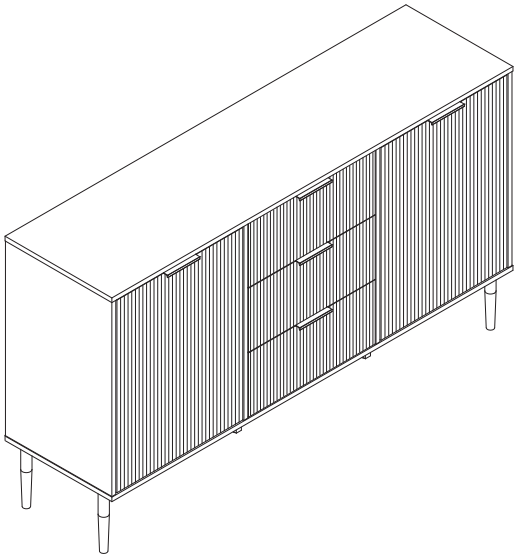

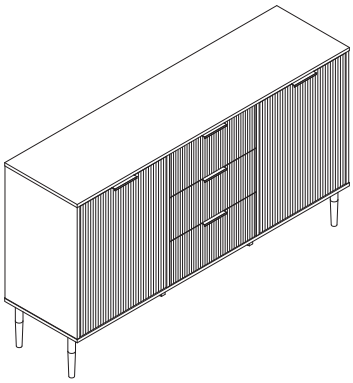

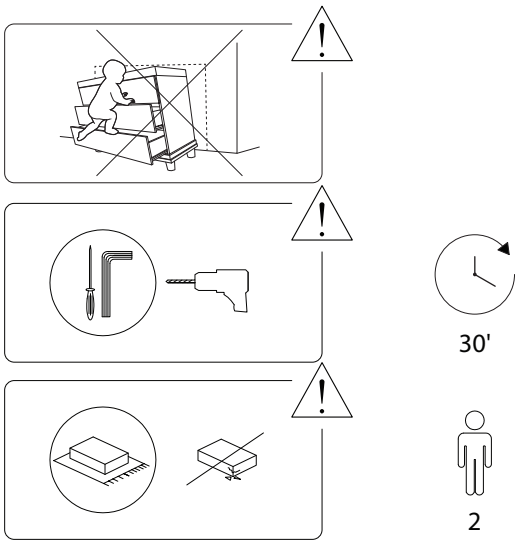
30'
2

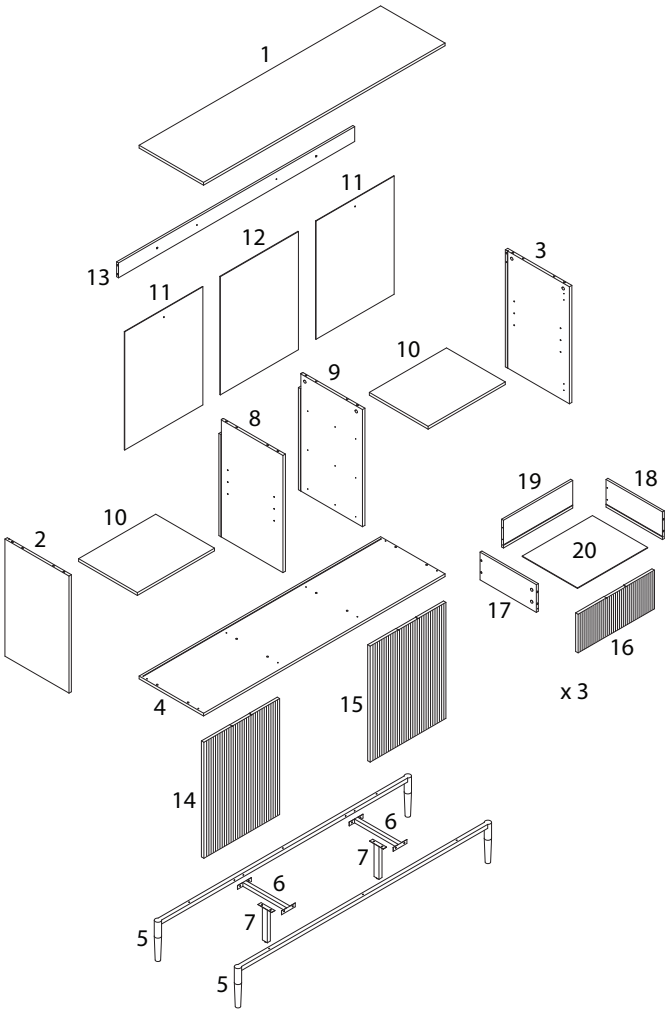
1
13
11
12
11
3
10
9
8
10
2
19
18
20
17
16
x 3
4
15
14
6
7
6
7
5
5

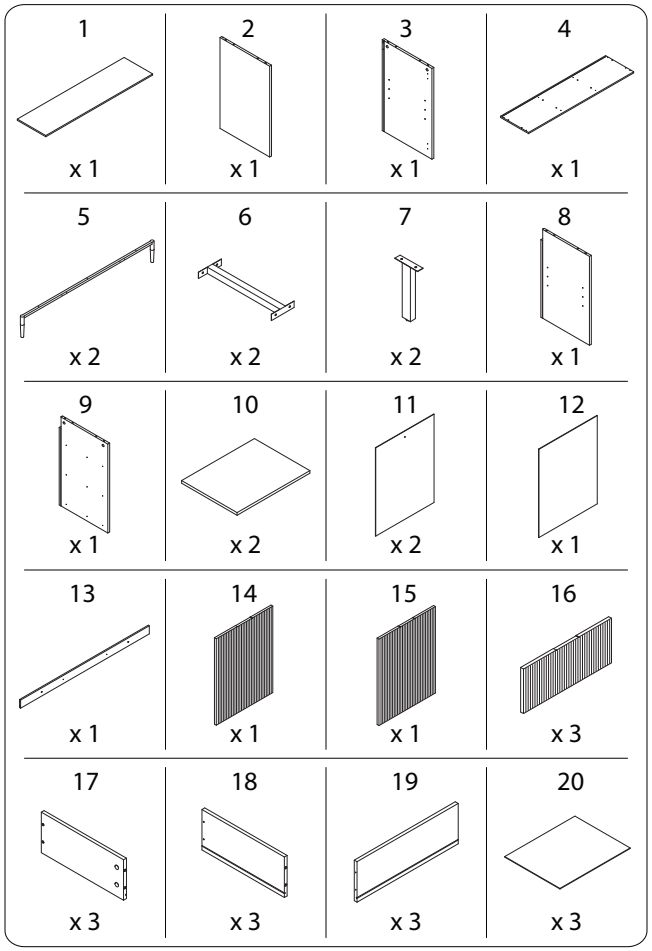
1 x 1
2 x 1
3 x 1
4 x 1
5 x 2
6 x 2
7 x 2
8 x 1
9 x 1
10 x 2
11 x 2
12 x 1
13 x 1
14 x 1
15 x 1
16 x 3
17 x 3
18 x 3
19 x 3
20 x 3

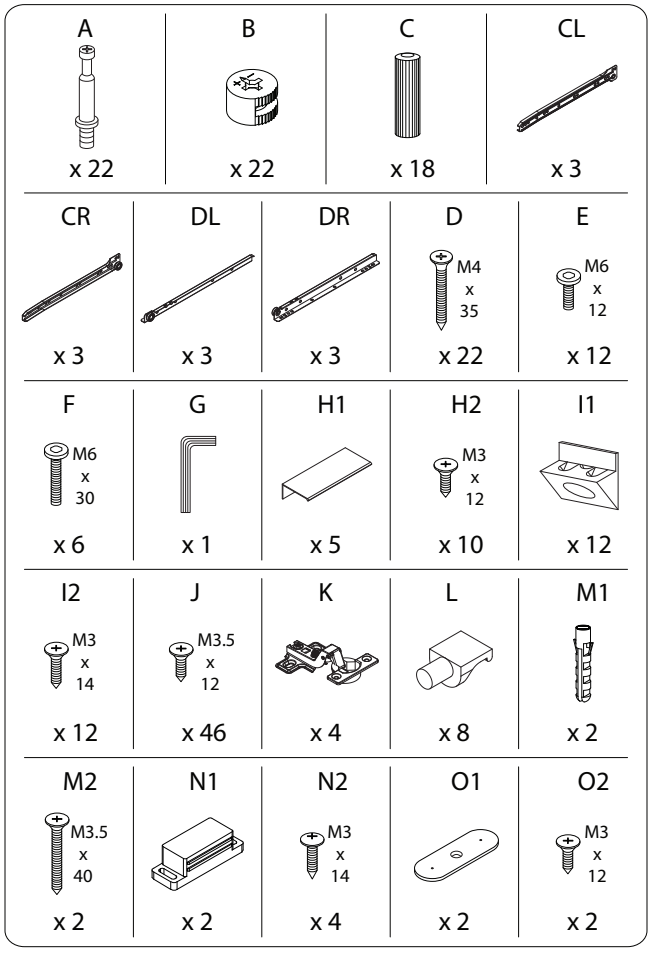
A x 22
B x 22
C x 18
CL x 3
CR x 3
DL x 3
DR x 3
D M4 x 35 x 22
E M6 x 12 x 12
F M6 x 30 x 6
G x 1
H1 x 5
H2 M3 x 12 x 10
I1 x 12
I2 M3 x 14 x 12
J M3.5 x 12 x 46
K x 4
L x 8
M1 x 2
M2 M3.5 x 40 x 2
N1 x 2
N2 M3 x 14 x 4
O1 x 2
O2 M3 x 12 x 2

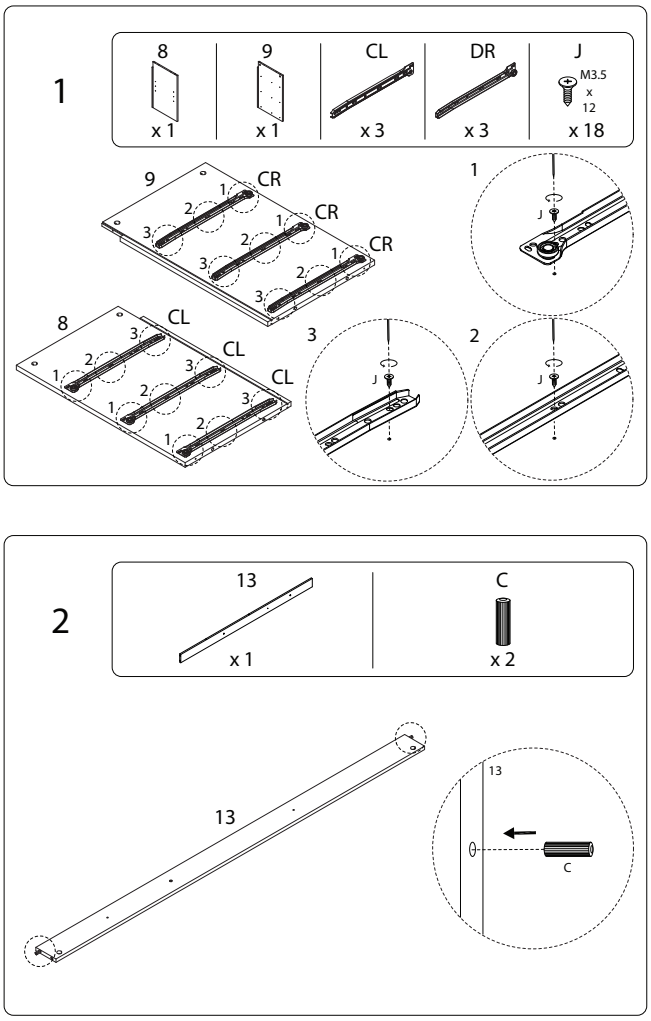
1
8 x 1
9 x 1
CL x 3
DR x 3
J M3.5 x 12 x 18
9
CR
8
CL
1
2
3
J
2
13 x 1
C x 2
13
C

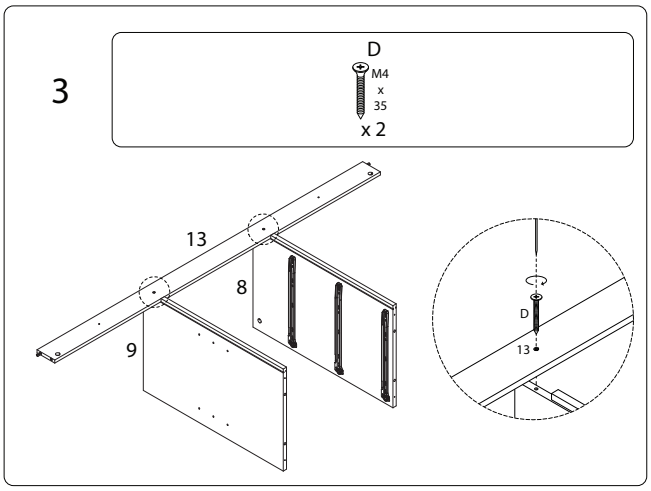
3
D M4 x 35 x 2
13
8
9
D
13

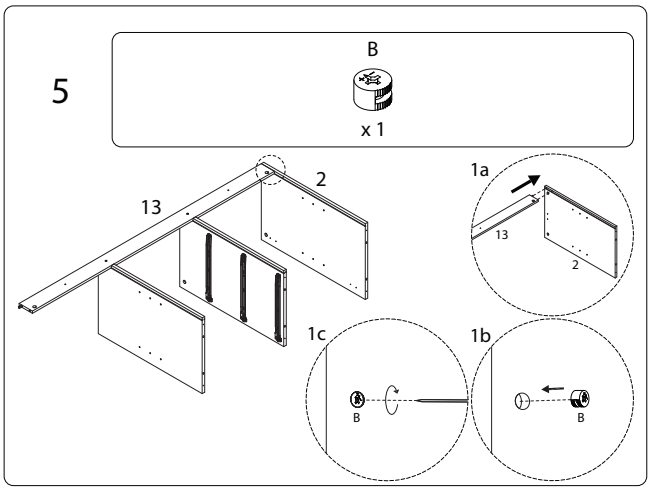
5
B x 1
13
2
1a
1c
1b
B

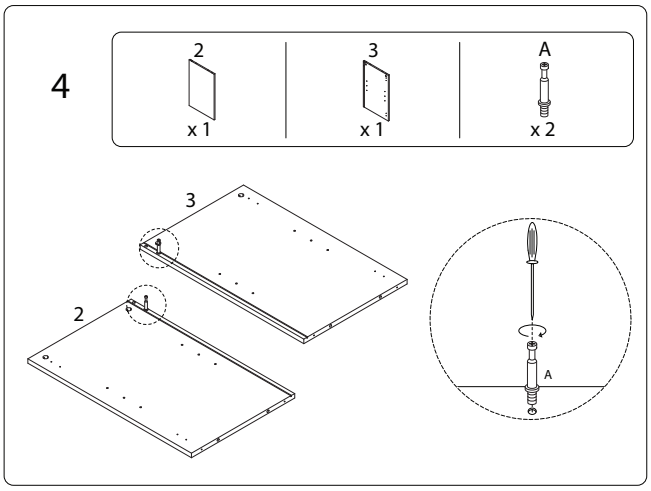
4
2 x 1
3 x 1
A x 2
3
2
A

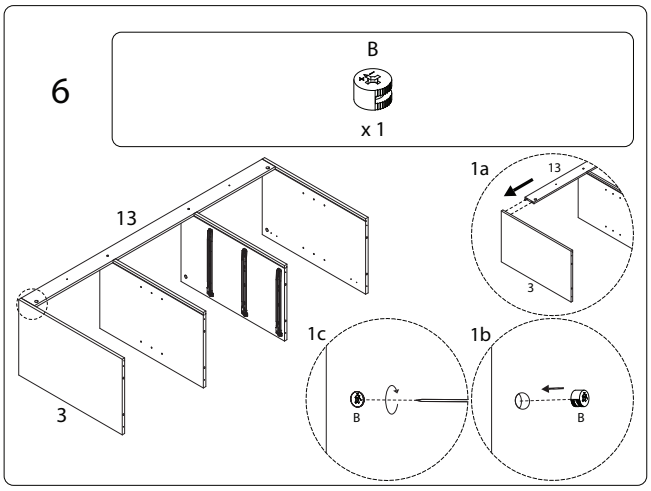
6
B x 1
13
1a
1c
1b
3
B

7

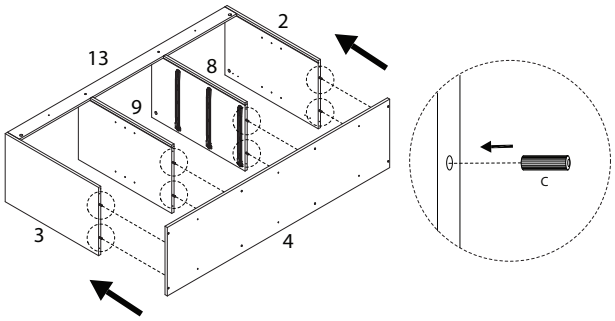

8

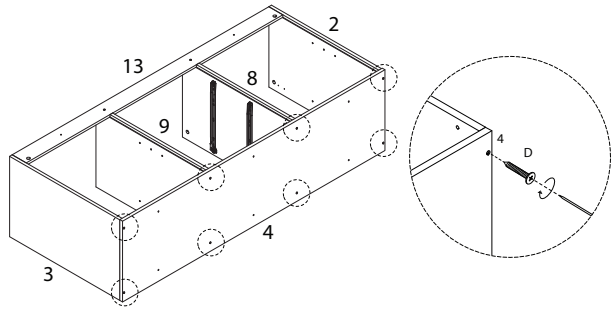

9

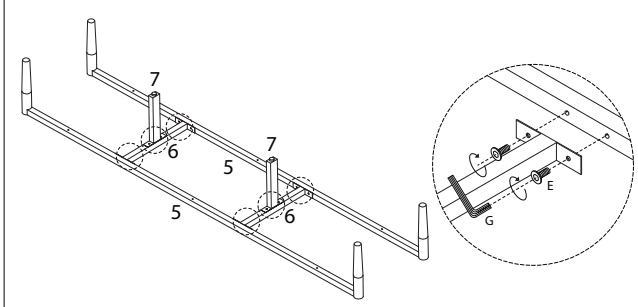

10

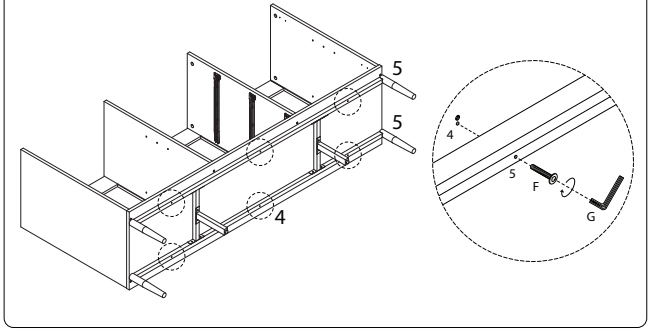

11

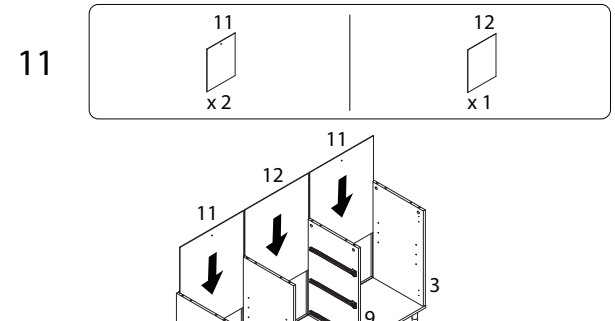

12

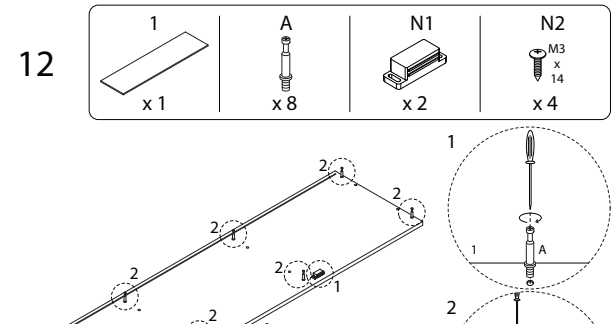

13

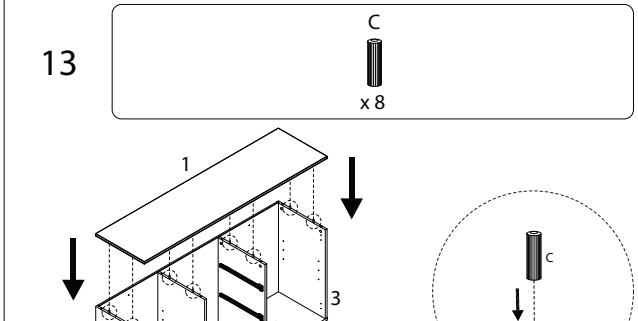

14

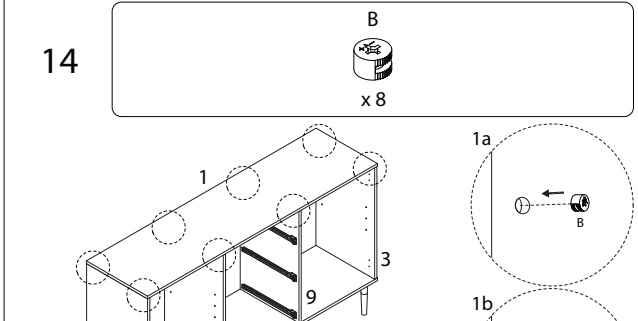

15

14	15	H1	H2
x 1	x 1	x 2	M3 x 12 x 4
J	**K**	**O1**	**O2**
M3.5 x 12 x 8	x 4	x 2	M3 x 12 x 2

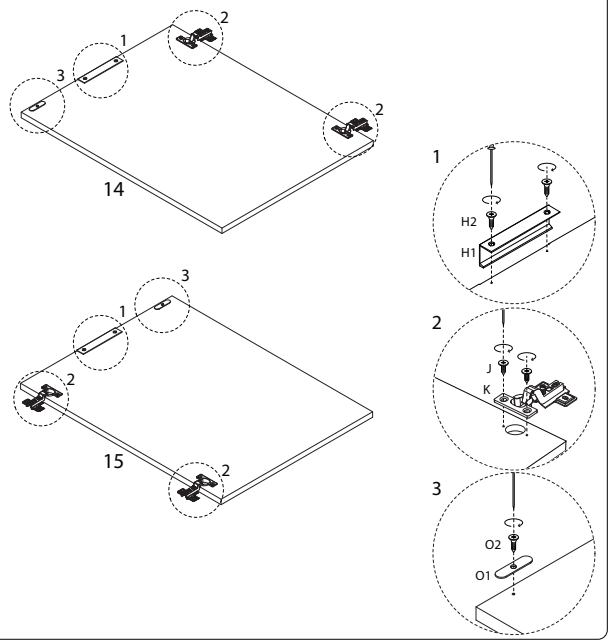

16

I1	I2
x 12	M3 x 14 x 12

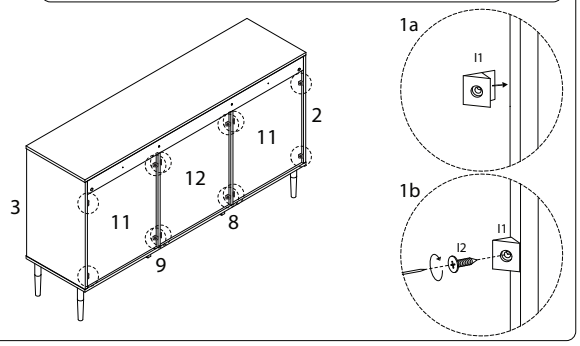

17

J
M3.5 x 12 x 8

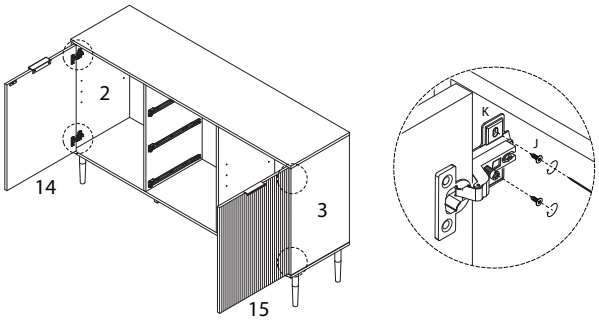

18

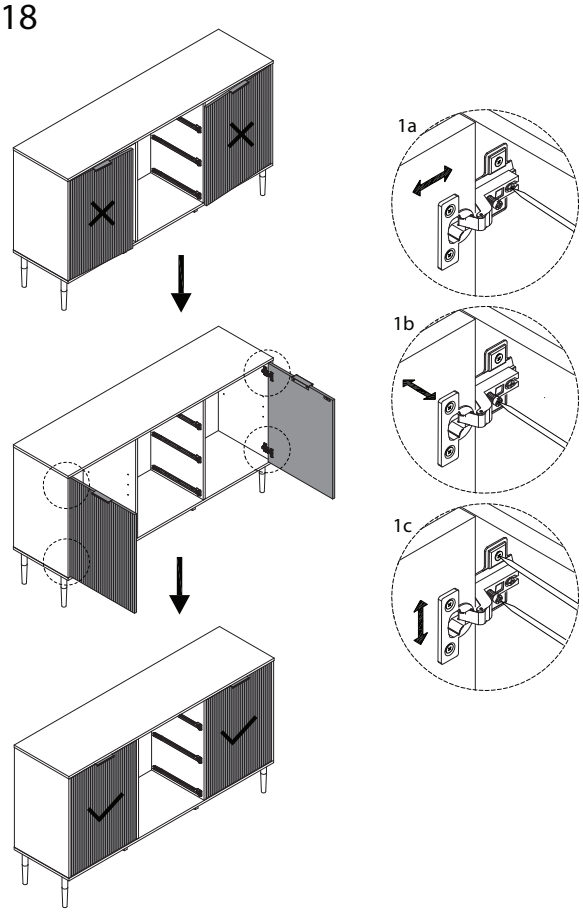

19

M1	M2
x 2	M3.5 x 40 x 2

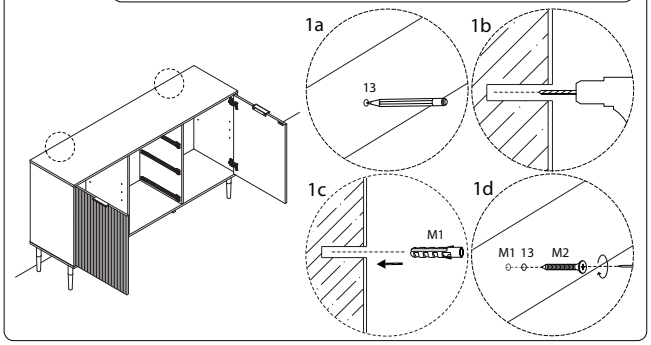

20

L
x 8

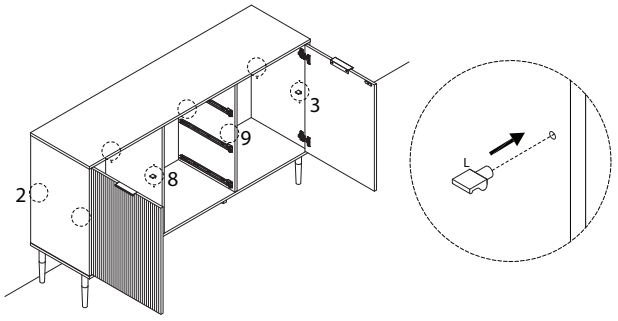

21

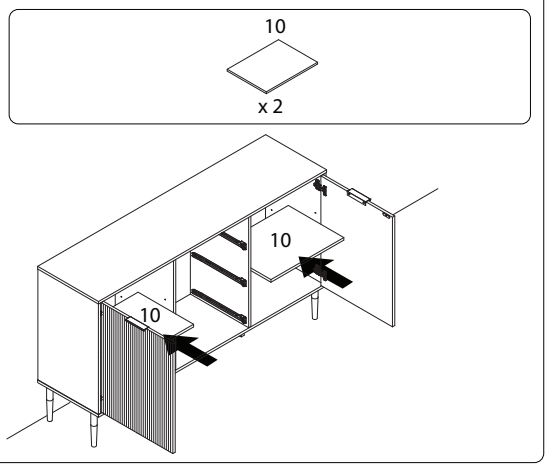

22 x 3

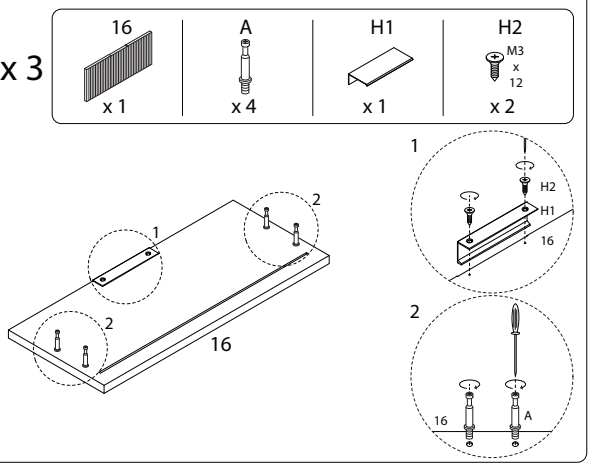

23 x 3

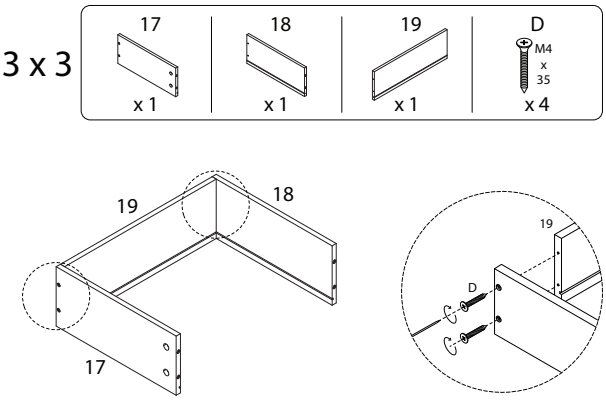

24 x 3

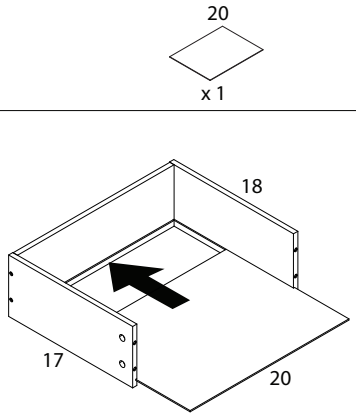

25 x 3

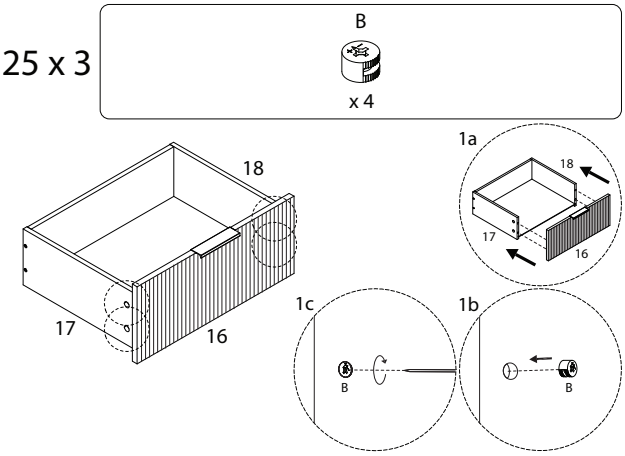

26 x 3

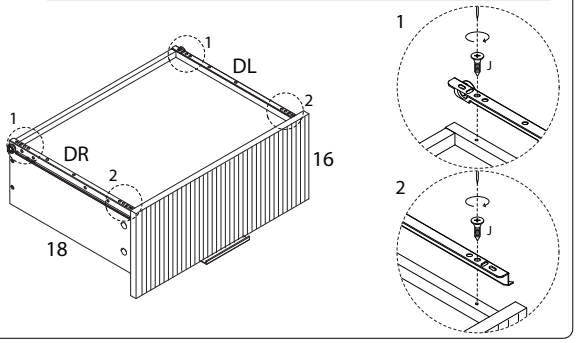
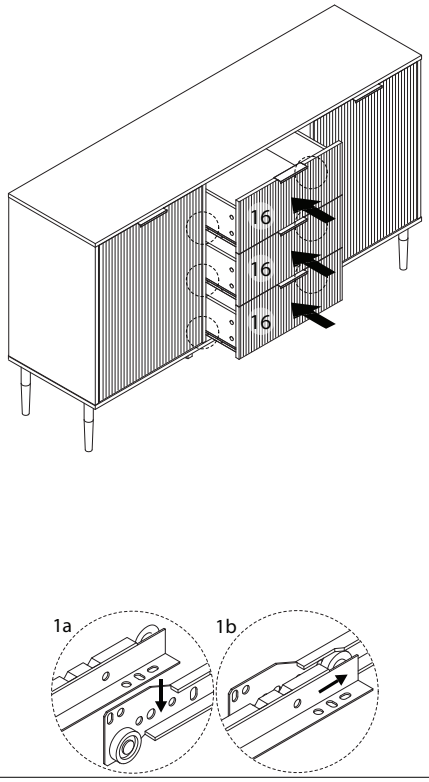
27