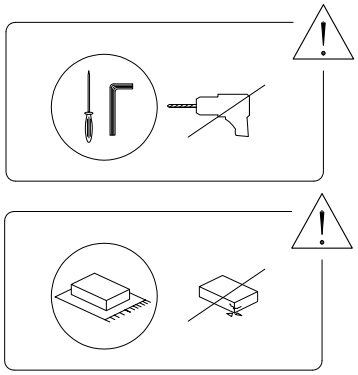

90′

1

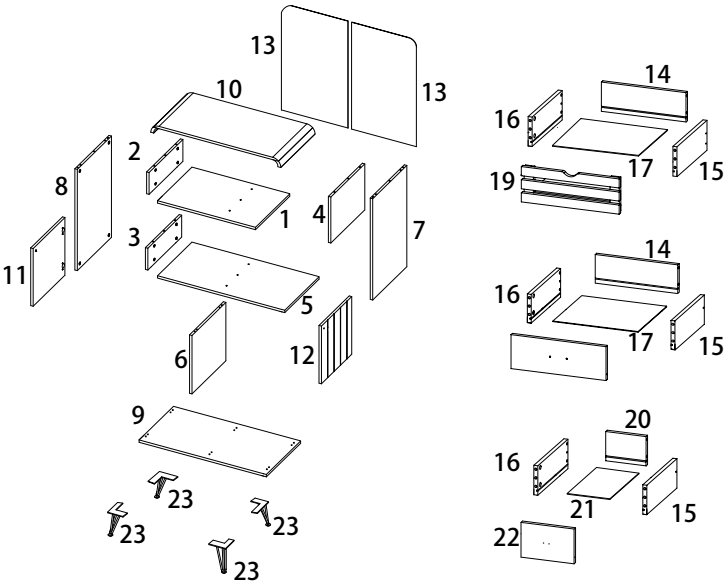

6	7	8	9	10
x 1	x 1	x 1	x 1	x 1

11	12	13
x 1	x 1	x 2
14	15	16
x 2	x 3	x 3
17	18	19
x 2	x 1	x 1
20	21	22
x 1	x 1	x 1
23		
x 4		

A	B	C	D	E1
x 38	x 36	x 36	M6 x 12 x 56	x 3
E2	E3	E4	F	G
x 3	x 3	x 3	M8 x 50 x 8	x 2
H	I	J	K	L
x 1	M13 x 15 x 12	x 4	x 4	x 2
M	N	O	P	Q
M4 x 22 x 2	M6 x 32 x 6	x 1	M6 x 12 x 2	x 1
R	S	T	U	
M4 x 25 x 2	x 18	x 1	M6 x 15 x 1	

1

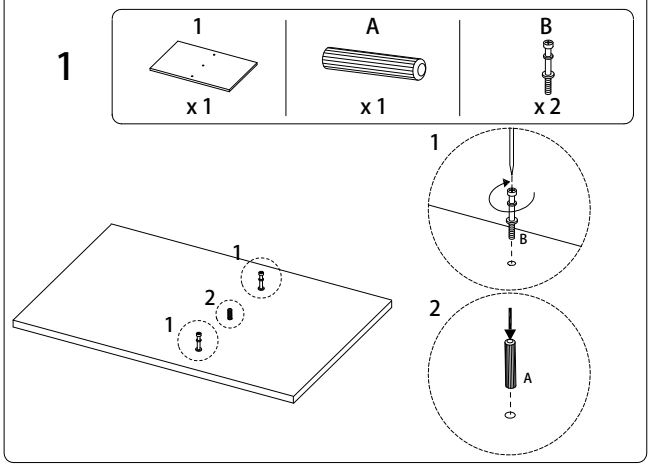
1
x 1
A
x 1
B
x 2
1
2
1
1
B
2
A

2

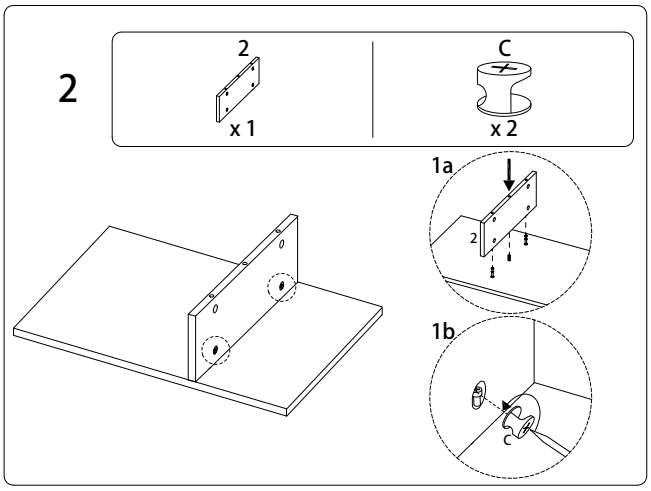
2
x 1
C
x 2
1a
2
1b
C

3

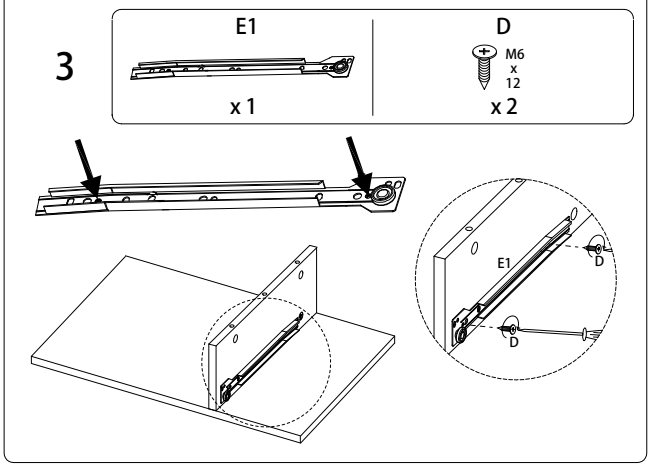
E1
x 1
D
M6
x
12
x 2
E1
D
D

4

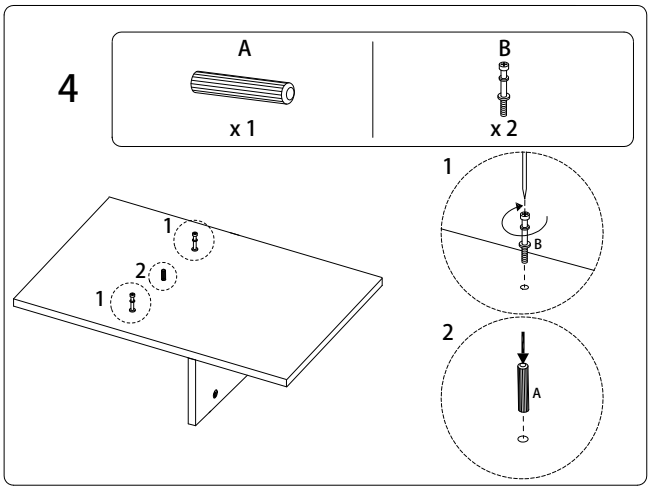
A
x 1
B
x 2
1
2
1
1
B
2
A

5

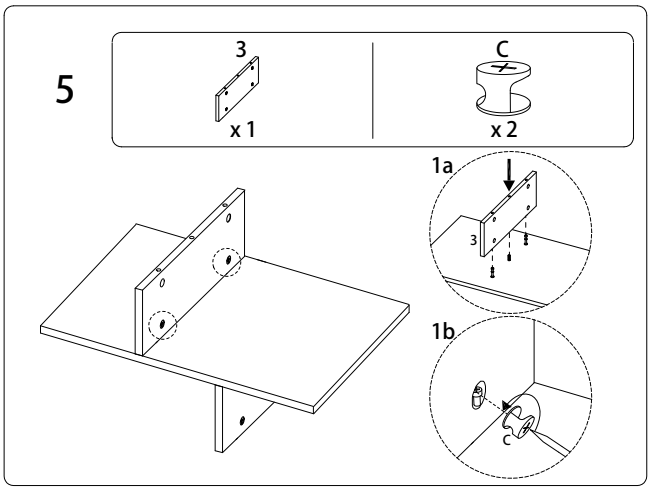
3
x 1
C
x 2
1a
3
1b
C

6

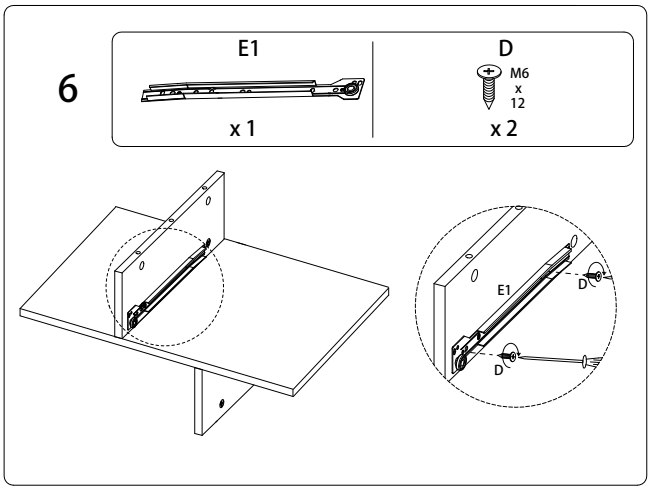
E1
x 1
D
M6
x
12
x 2
E1
D
D

7

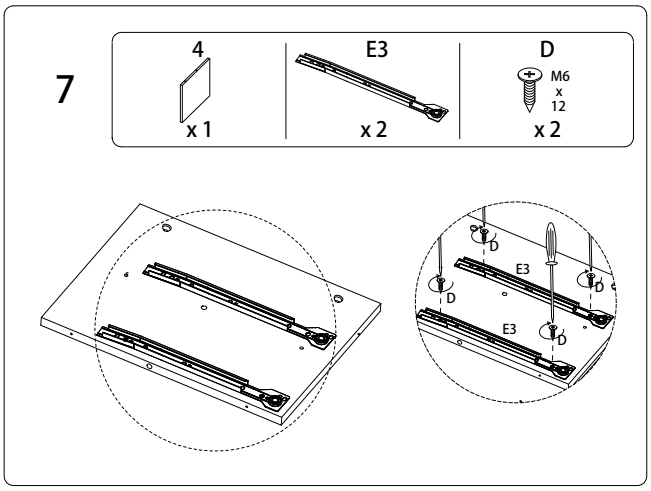
4
x 1
E3
x 2
D
M6
x
12
x 2
D
E3
D
D
E3
D

8

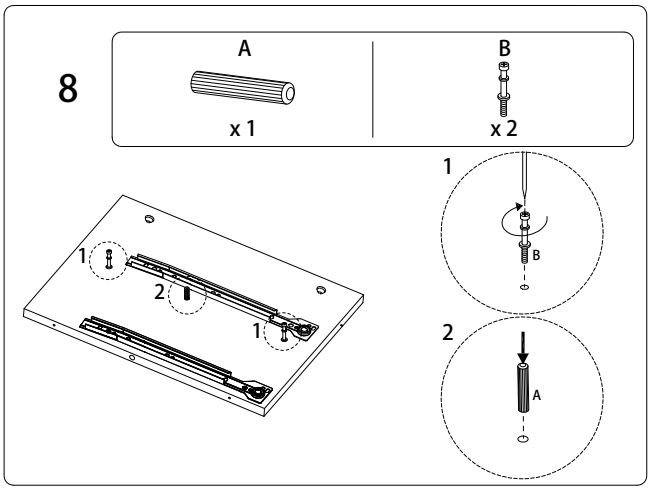
A
x 1
B
x 2
1
2
1
1
B
2
A

9

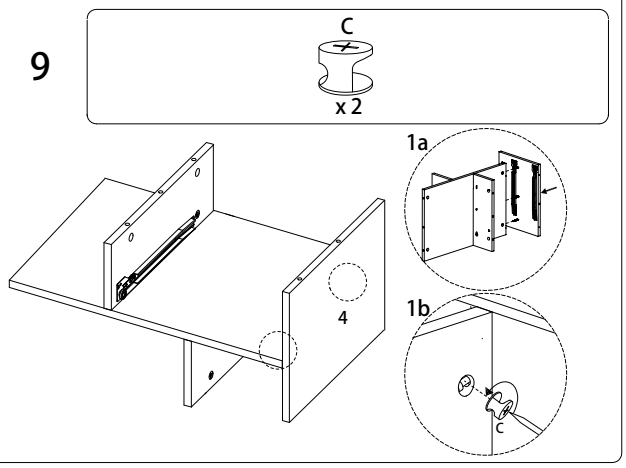

10

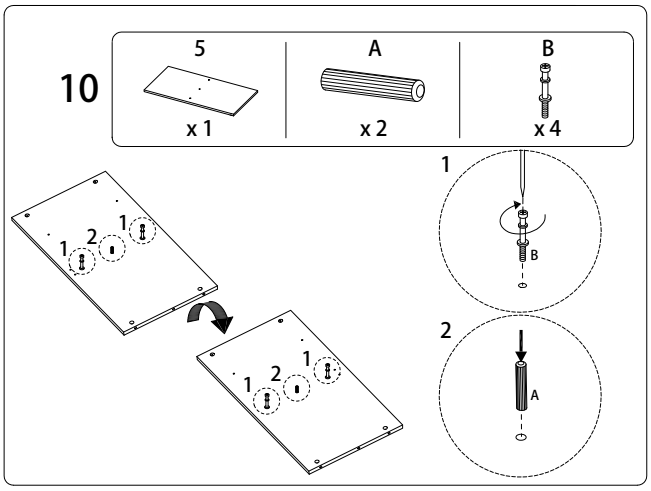

11

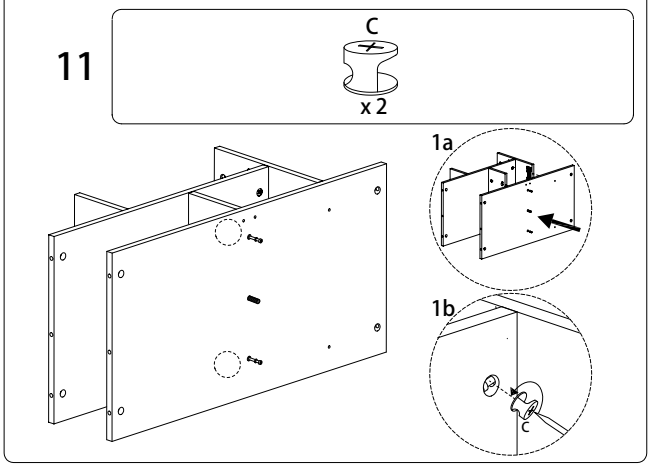

12

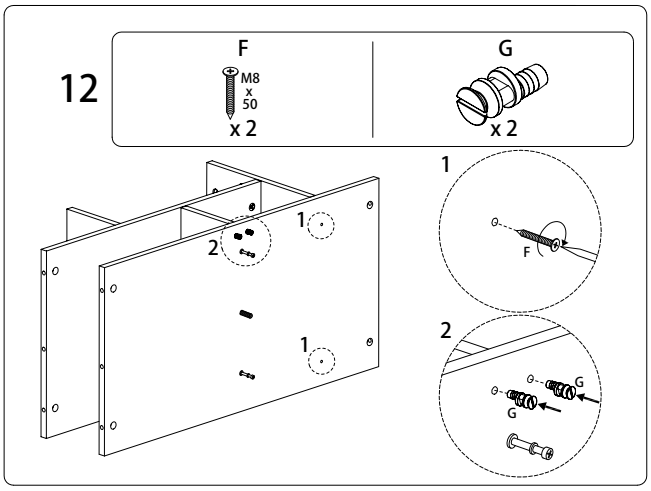

13

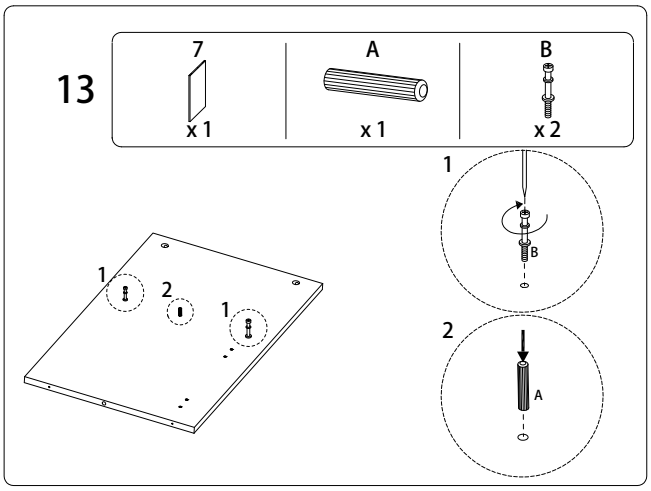

14

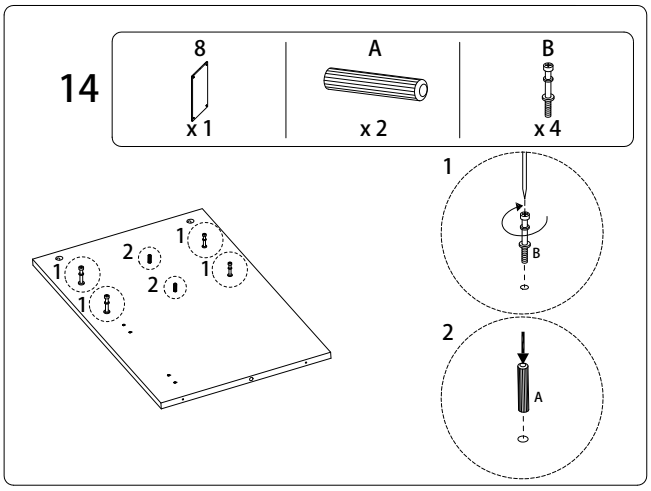

15

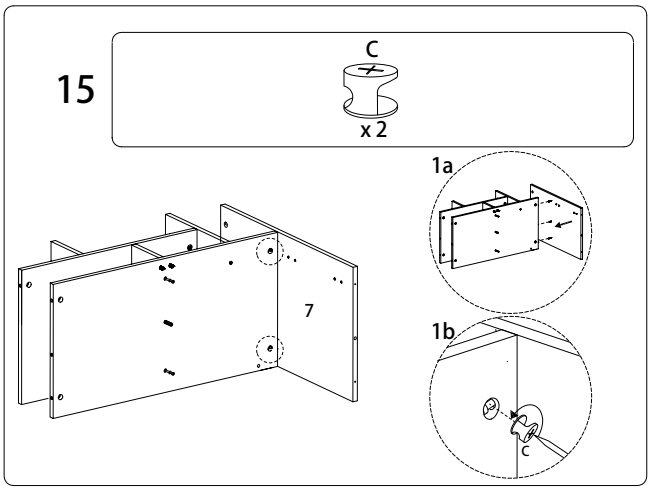

16

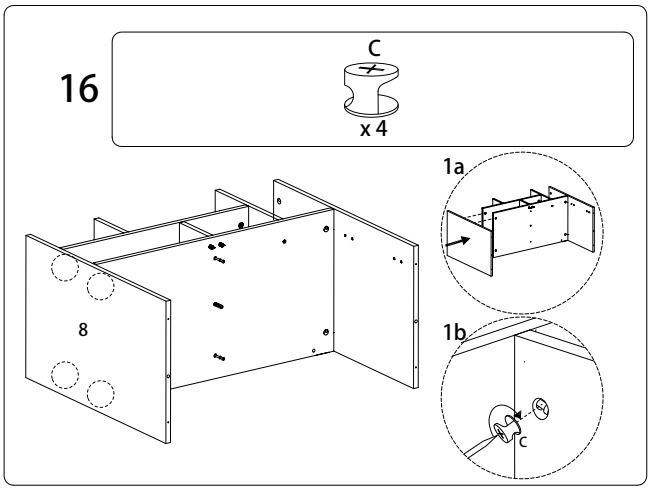

17

6	C
x 1	x 2

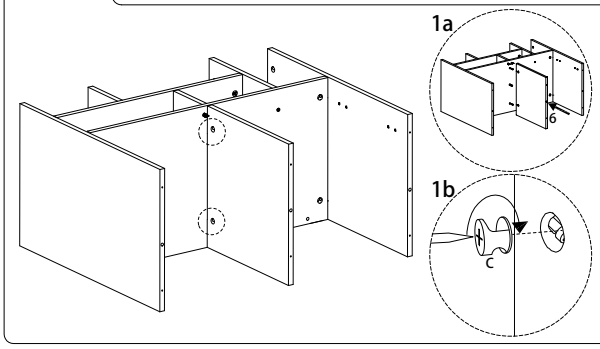

18

A
x 3

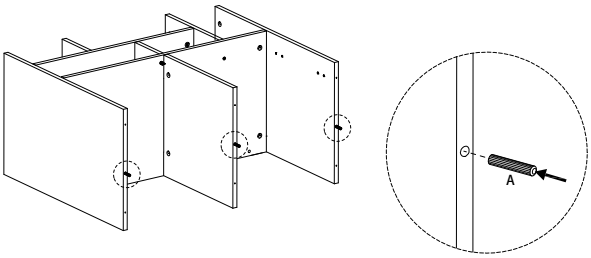

19

9	F
x 1	M8 x 50 x 6

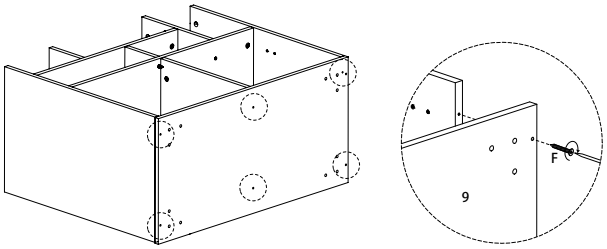

20

10	A	B
x 1	x 8	x 8

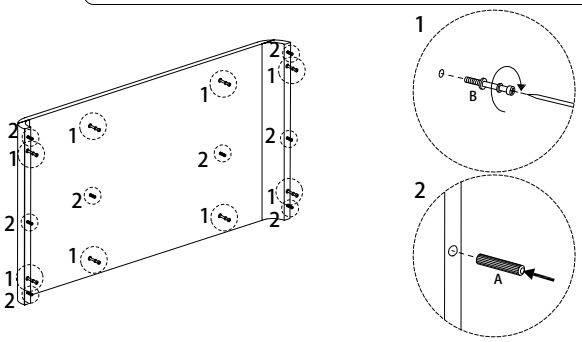

21

C
x 8

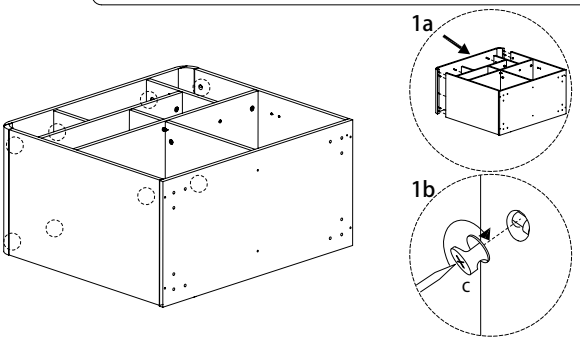

22

11	12	K	D	L	M
x 1	x 1	x 4	M6 x 12 x 8	x 2	M4 x 22 x 2

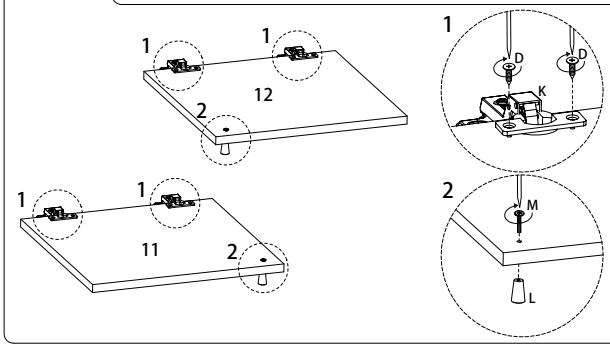

23

D
M6 x 12 x 8

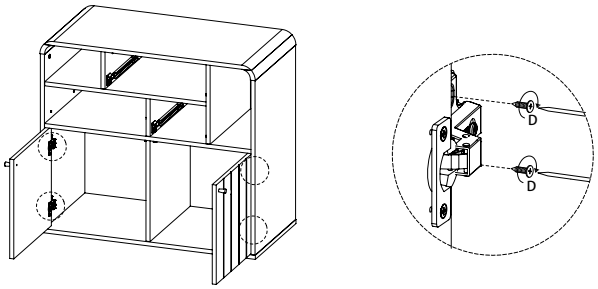

24

E1	E3	D
x 1	x 1	M6 x 12 x 4

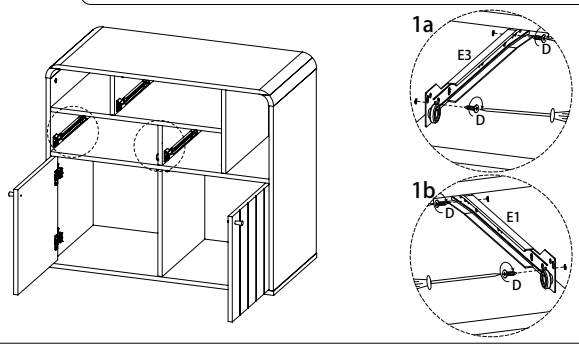

25

13	D
x 2	M6 x 12 x 16

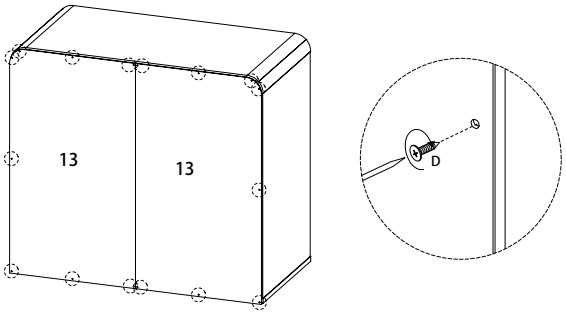

26

23	H	I	J
x 4	x 1	M13 x 15 x 12	x 4

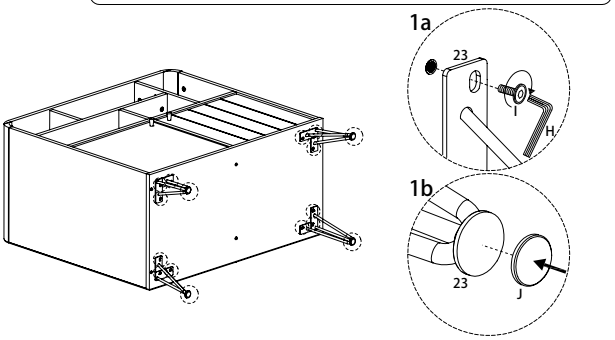

27

18	A	B
x 1	x 2	x 4

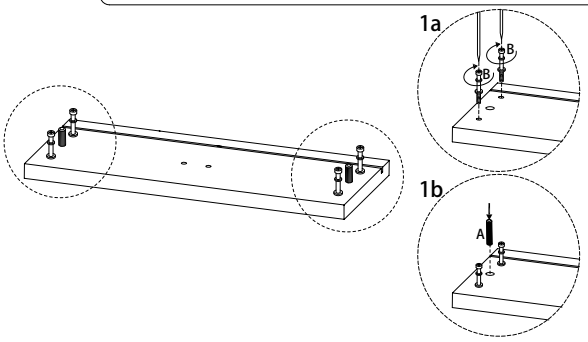

28

O	P
x 1	M6 x 12 x 2

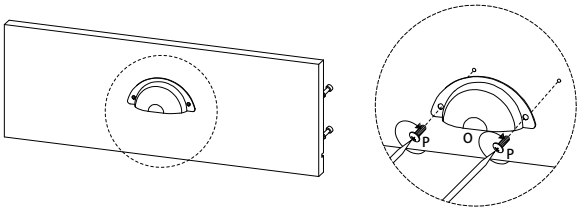

29 x3

15	16	E2	E4	D
x 1	x 1	x 1	x 1	M6 x 12 x 4

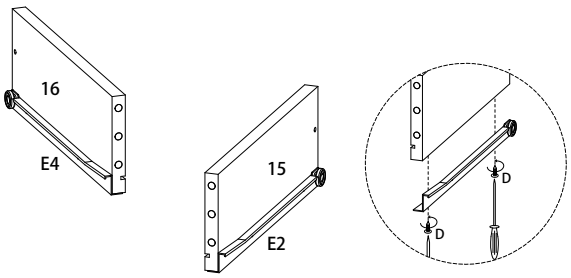

31

N
M6 x 32 x 2

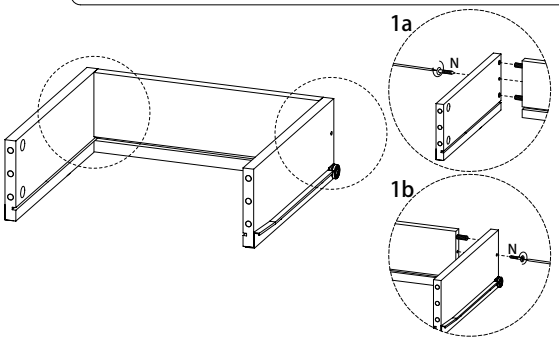

30

14	A
x 1	x 4

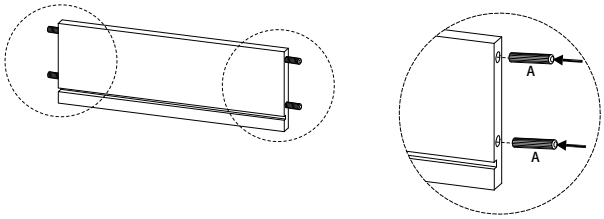

32

17
x 1

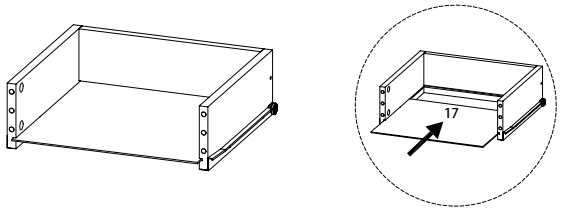

33

C
x 4

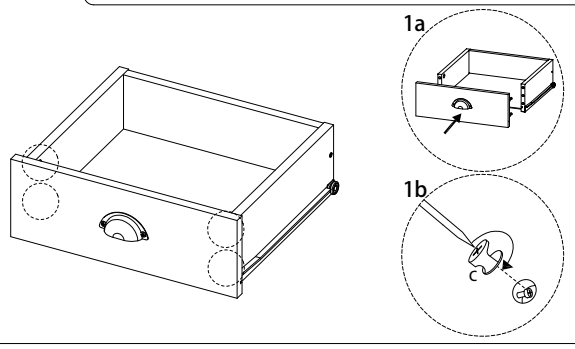

34

22	A	B
x 1	x 2	x 4

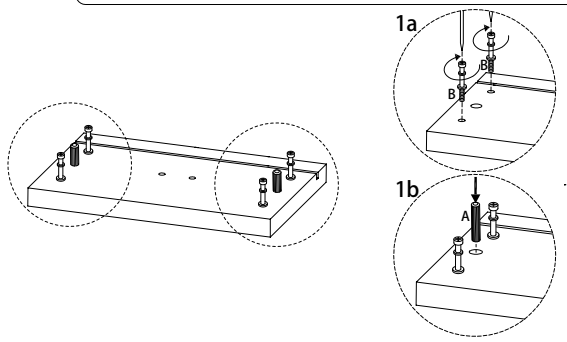

35

Q	R
x 1	M4 x 25 x 1

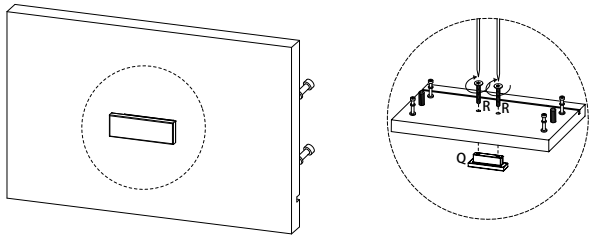

36

20	A
x 1	x 4

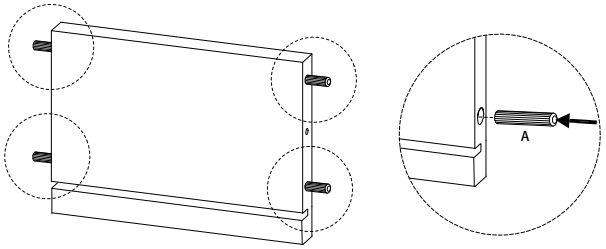

37

N
M6 x 32
x 2

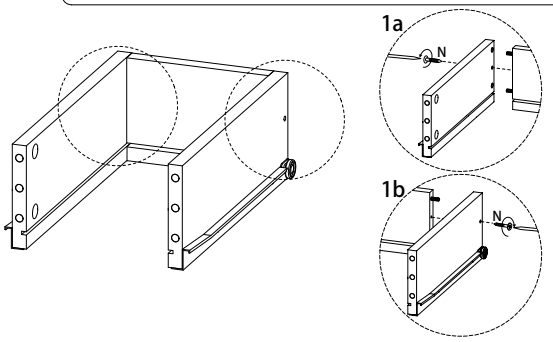

38

21
x 1

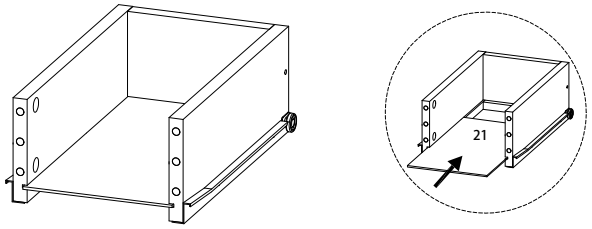

39

C
x 4

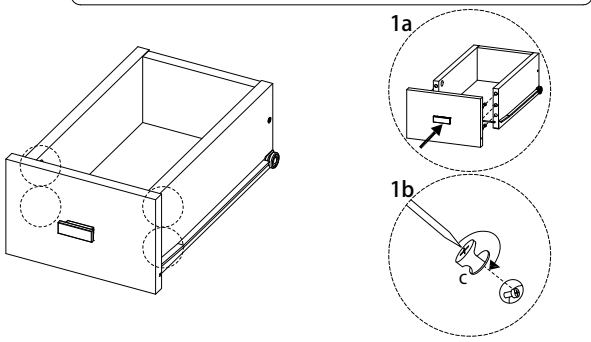

40

19	A	B
x 1	x 2	x 4

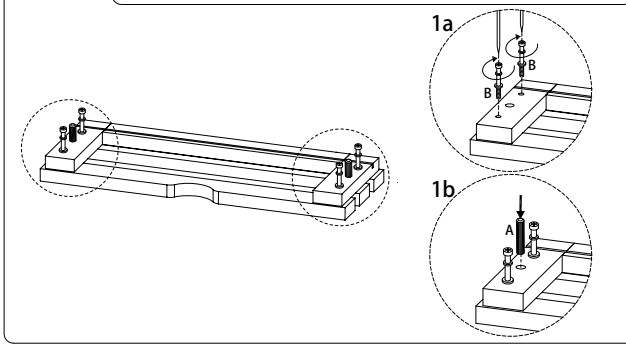

41

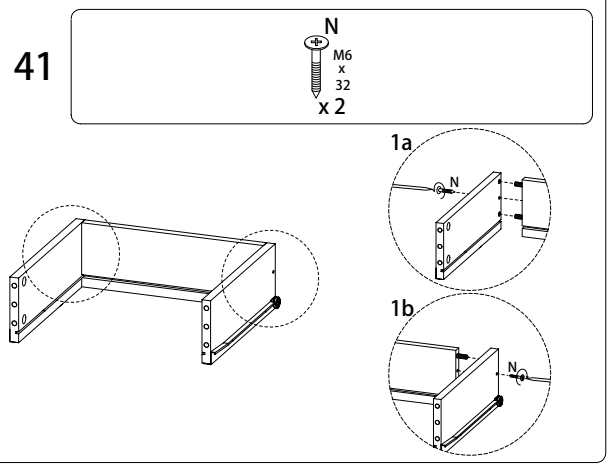

42

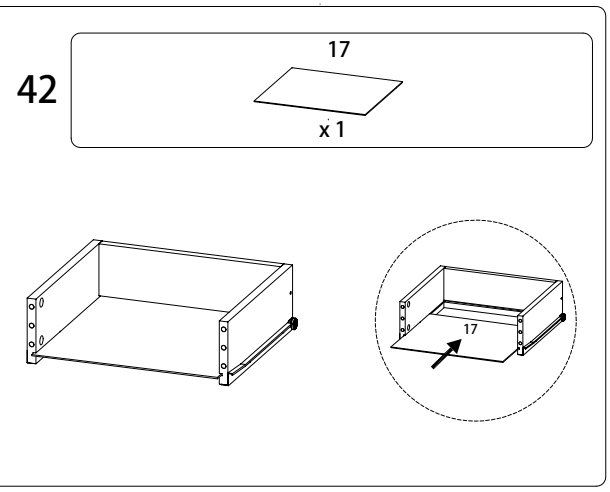

43

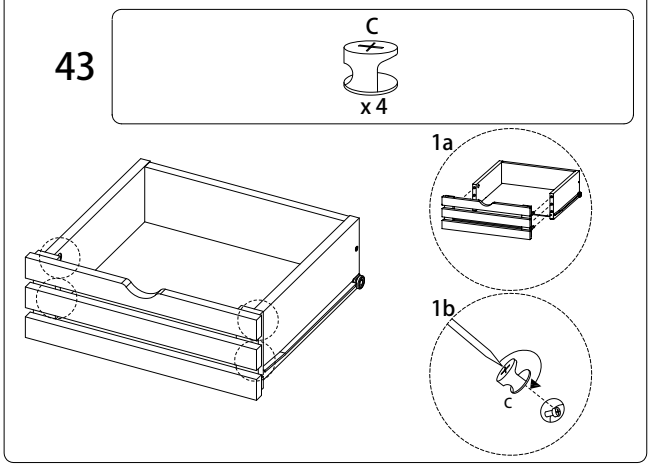

44

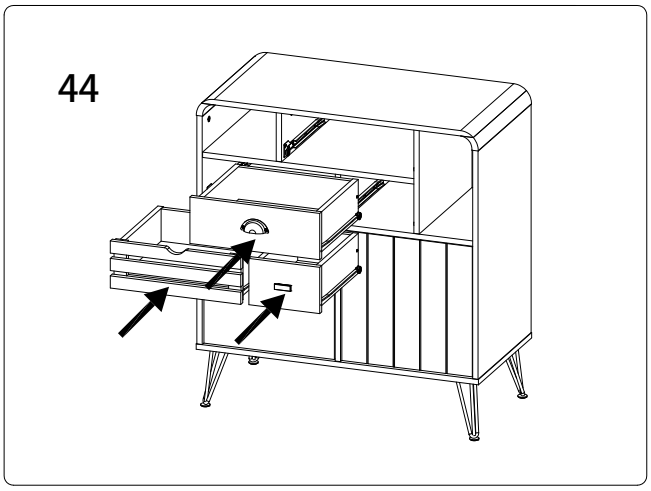

45 x18

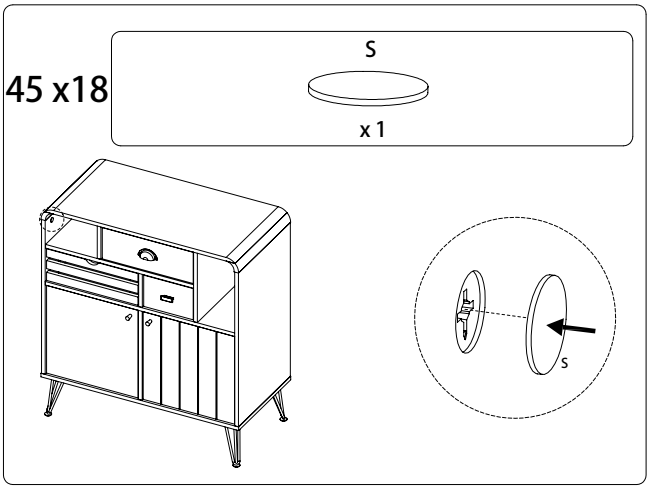

46

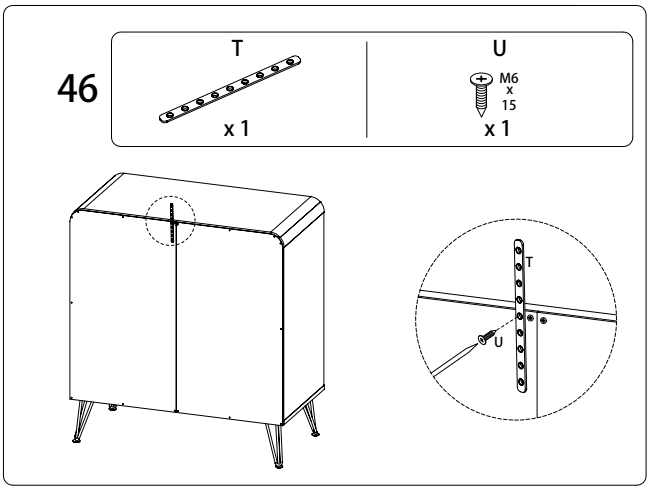
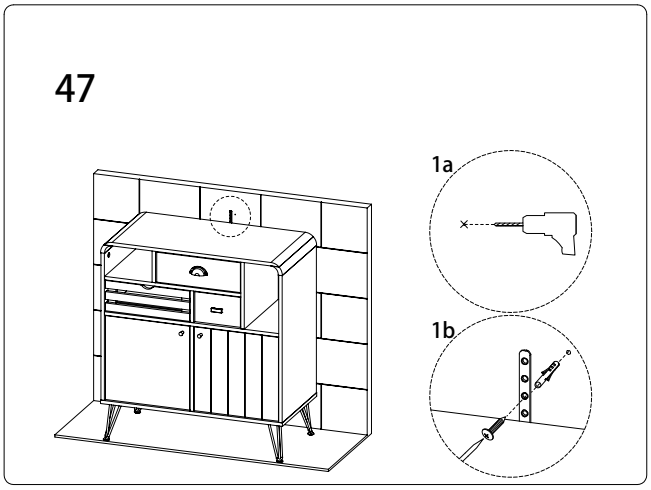
47