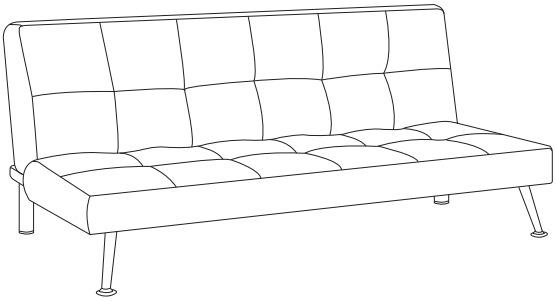

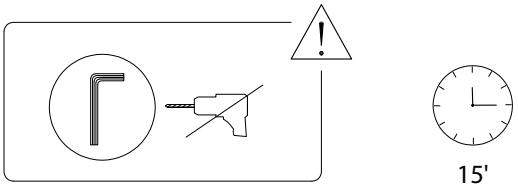
15'
1

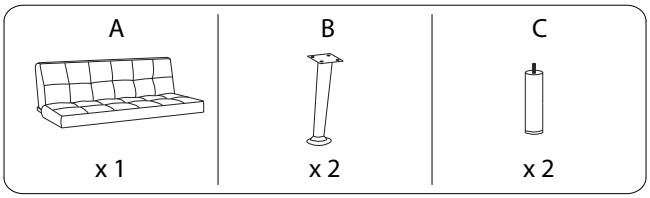
A
x 1
B
x 2
C
x 2

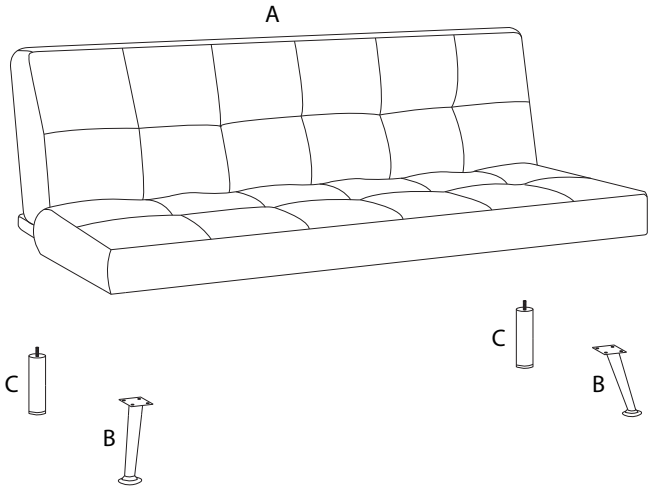
A
C
B
C
B

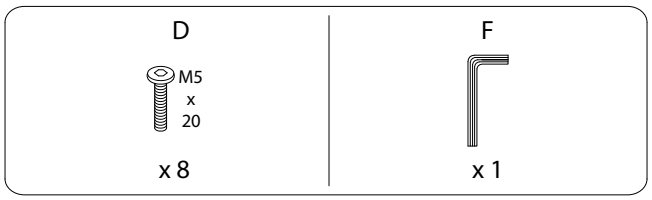
D
M5
x
20
x 8
F
x 1

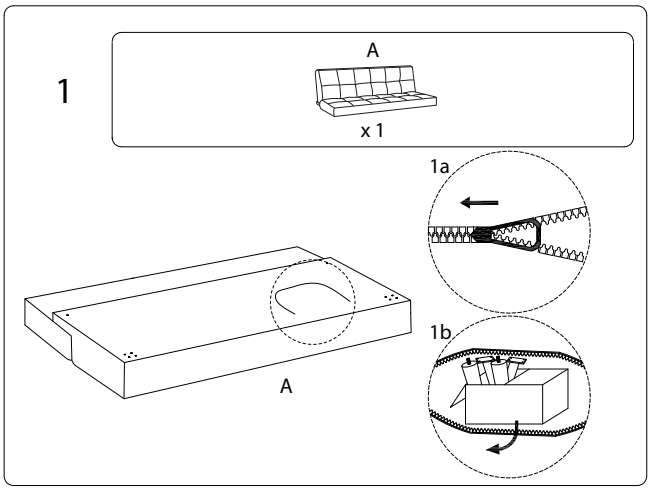
1
A
x 1
1a
1b
A

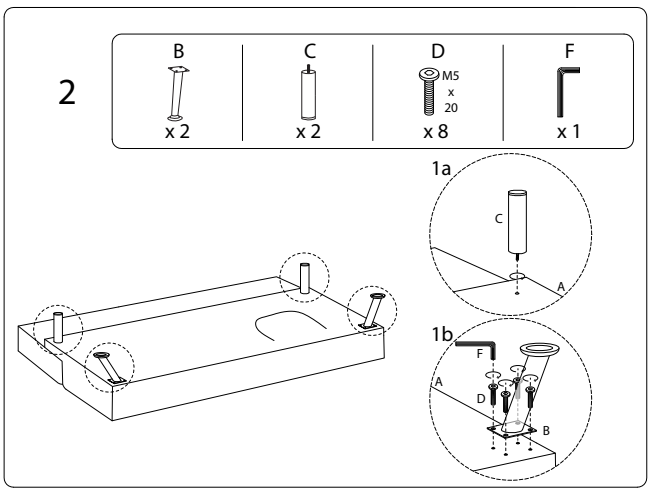
2
B
x 2
C
x 2
D
M5
x
20
x 8
F
x 1
1a
C
A
1b
F
A
D
B

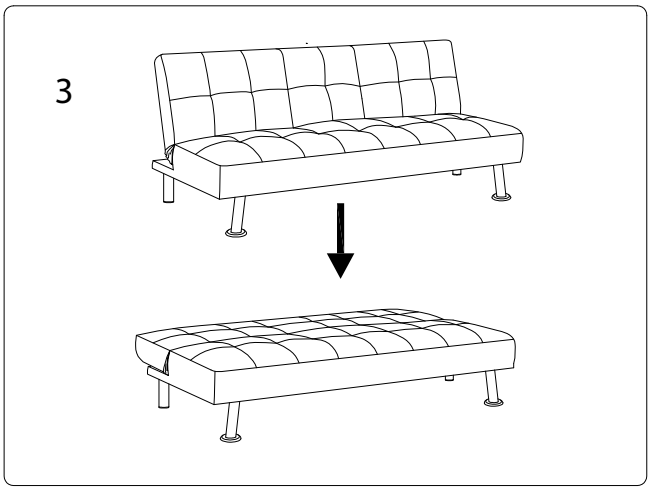
3