


20’

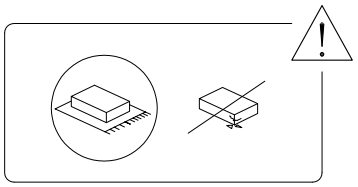


1

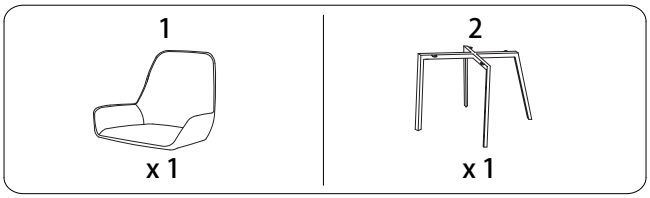
1
x 1
2
x 1

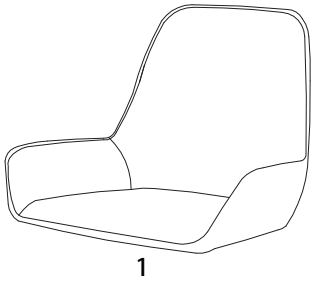
1

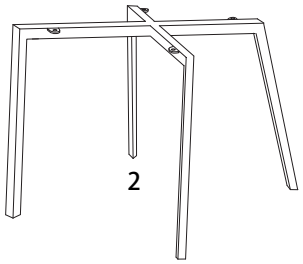
2

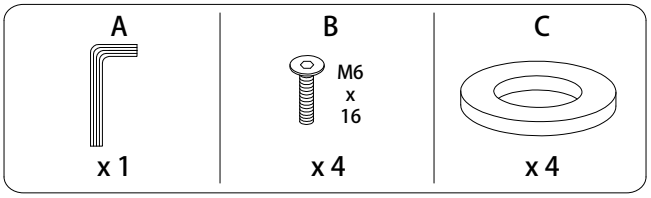
A
x 1
B
M6
x
16
x 4
C
x 4

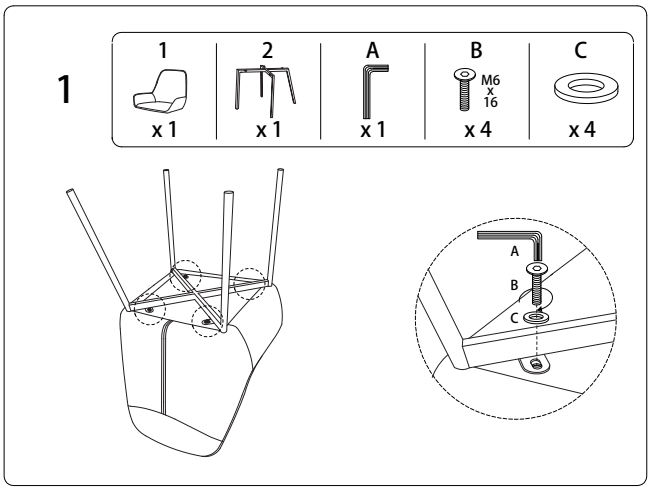
1
1
x 1
2
x 1
A
x 1
B
M6
x
16
x 4
C
x 4
A
B
C