EKSJO

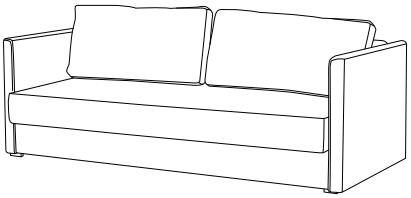

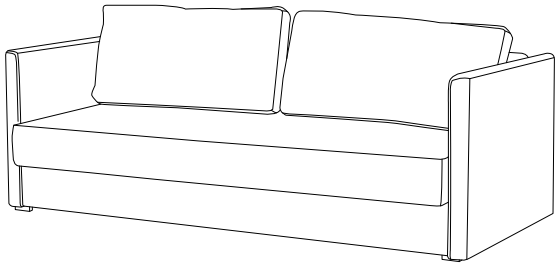

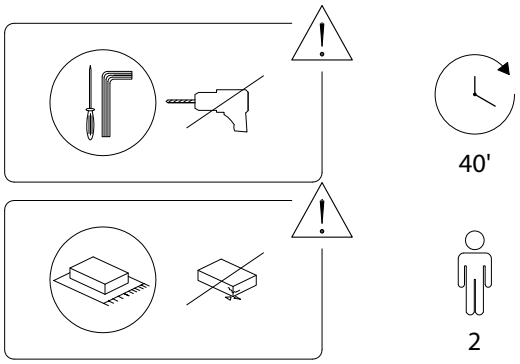

1082/EKSJO/091224/

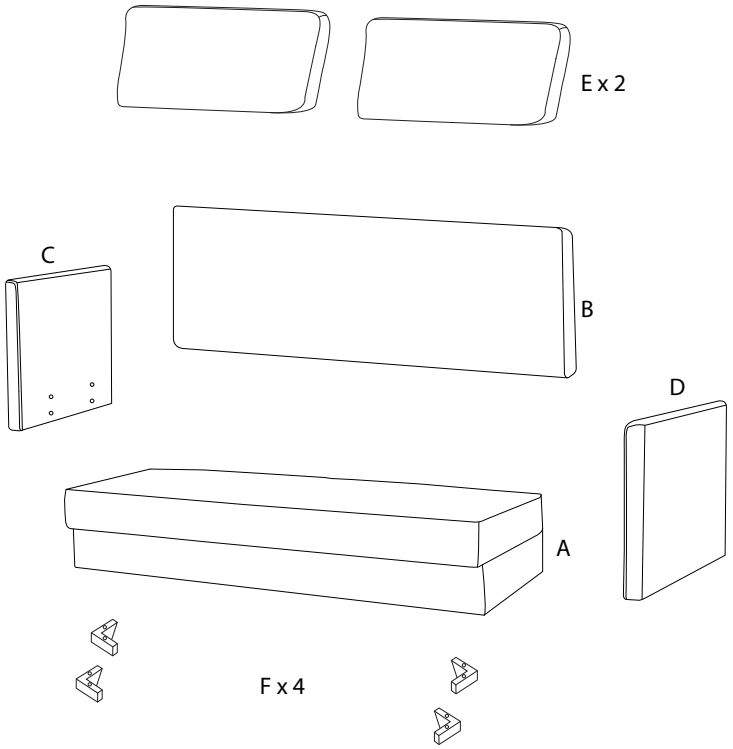

1082/EKSJO/091224/

A 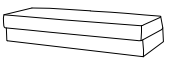 x 1	B  x 1	C 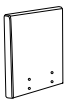 x 1
D 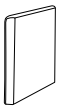 x 1	E  x 2	F  x 4
G  x 2	H  x 10	I  x 10
J 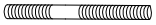 x 8	K  x 1	L  x 8
M  x 1		

1082/EKSJO/091224/

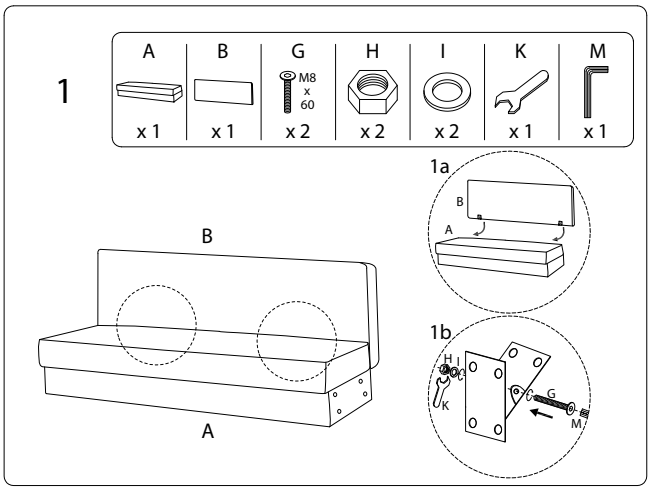
1
A
B
G
H
I
K
M
M8
x
60
x 1
x 1
x 2
x 2
x 2
x 1
x 1
1a
B
A
1b
H
I
K
G
M
B
A

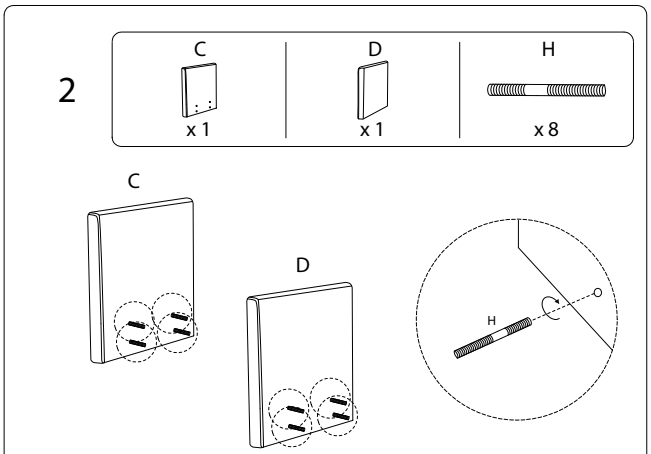
2
C
D
H
x 1
x 1
x 8
C
D
H

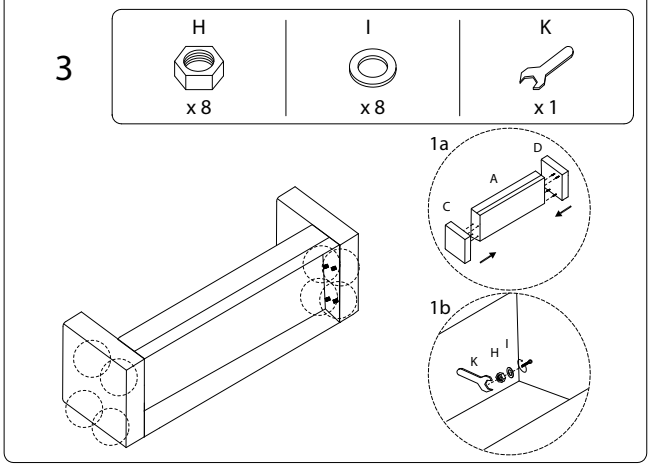
3
H
I
K
x 8
x 8
x 1
1a
D
A
C
1b
K
H
I

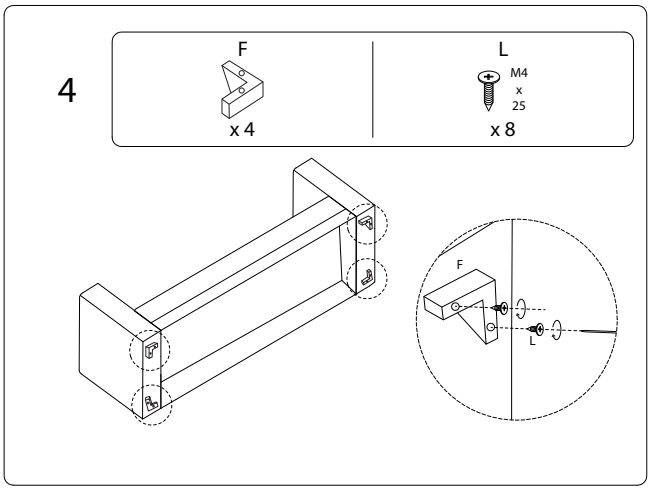
4
F
L
M4
x
25
x 4
x 8
F
L

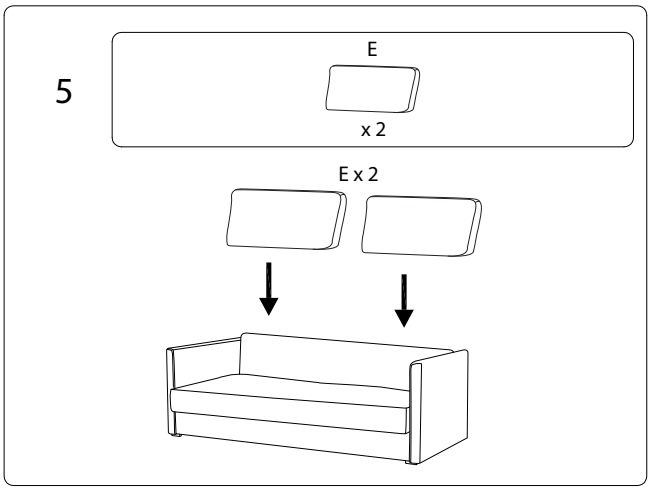
5
E
x 2
E x 2

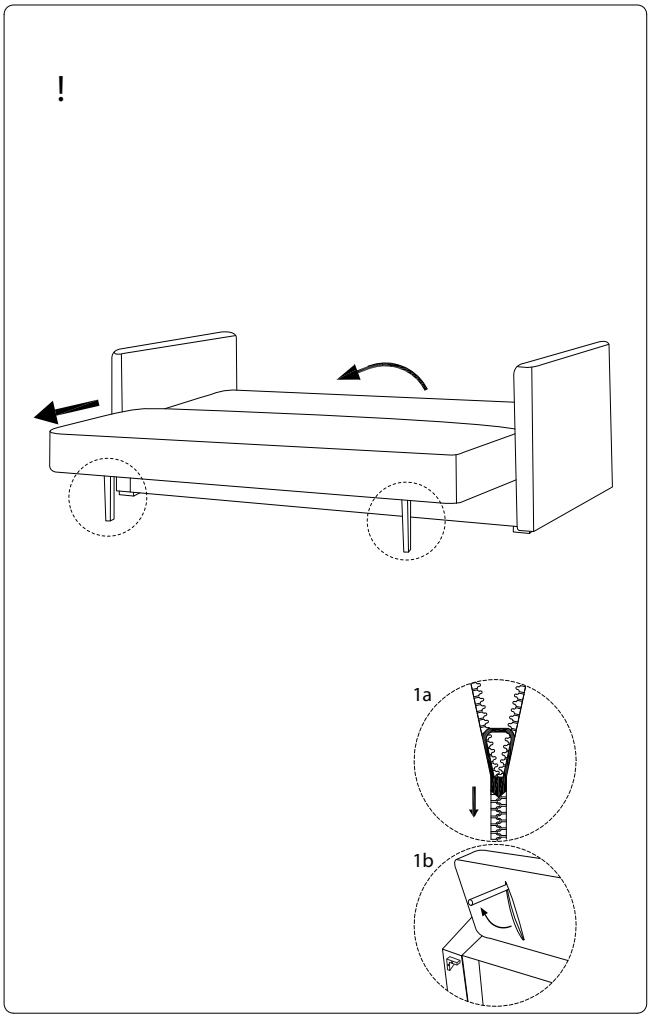
!
1a
1b