CAMPBELLTON

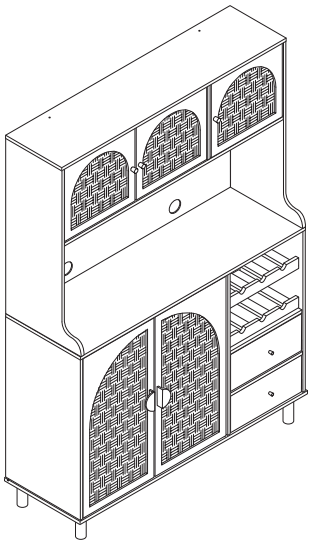

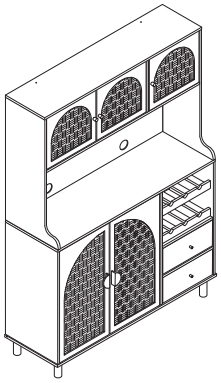

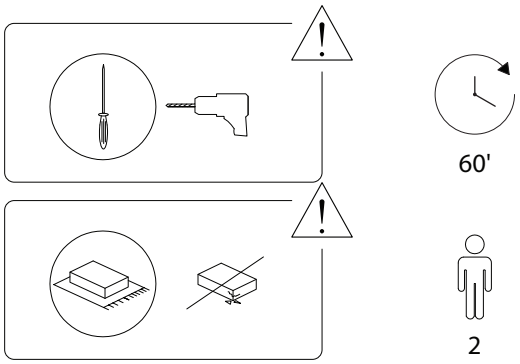

2359/CAMPBELLTON/240925/

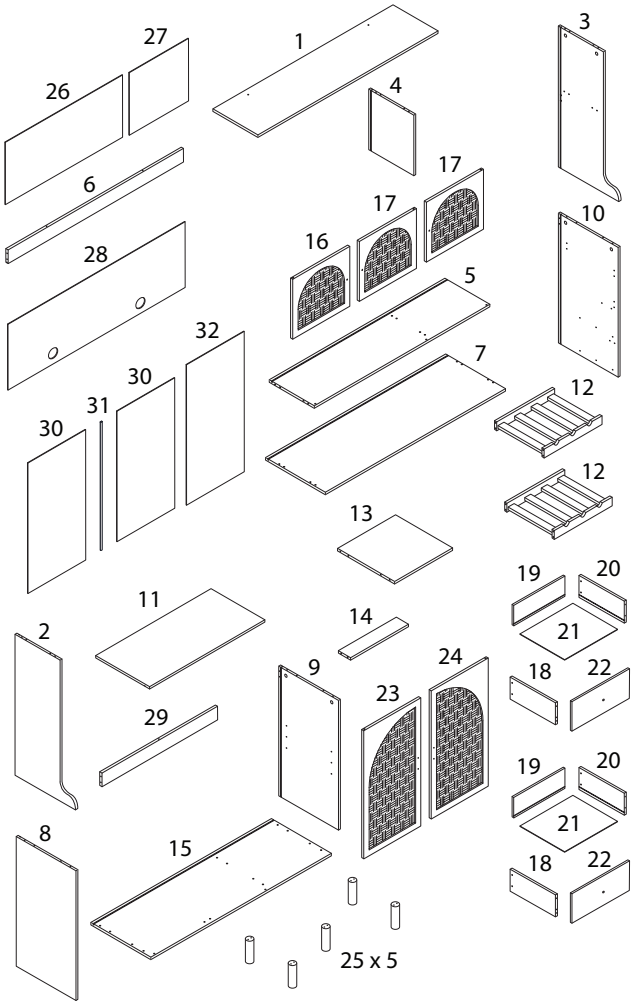

2359/CAMPBELLTON/240925/

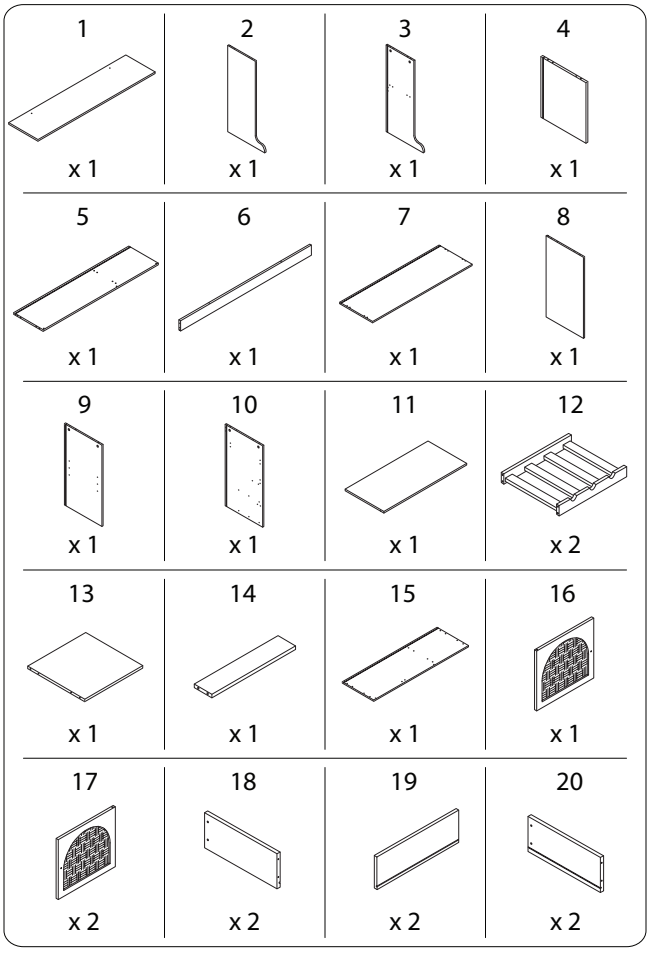

2359/CAMPBELLTON/240925/

21	22	23	24
x 2	x 2	x 1	x 1
25	26	27	28
x 5	x 1	x 1	x 1
29	30	31	32
x 1	x 2	x 1	x 1
A			
x 37			
B	C	D	E
x 37	x 44	M4 x 35 x 32	M3.5 x 12 x 24

FCL	FCR	FDL	FDR
x 2	x 2	x 2	x 2
G	H	I	J
M4 x 14 x 26	x 5	x 22	M3 x 16 x 30
K	L	M	N
x 2	x 5	M4 x 18 x 9	x 2
O	P	Q	R
x 4	x 10	x 7	x 4
S	T	U	V
M4 x 12 x 7	x 4	x 2	x 1

1

2	3	A
x 1	x 1	x 6

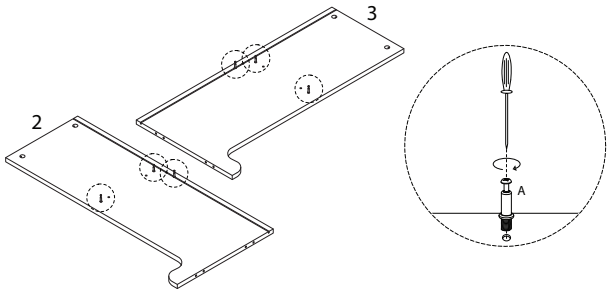

3

A
x 2

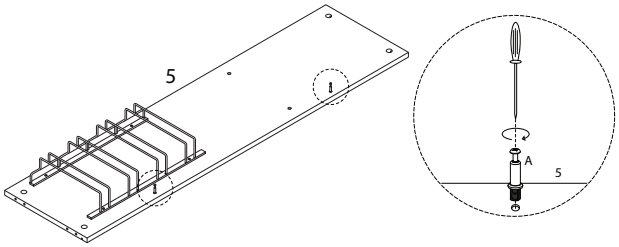

2

5	G	V
x 1	M4 x 14 x 4	x 1

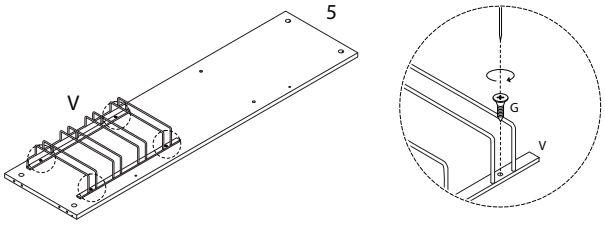

4

6	B
x 1	x 2

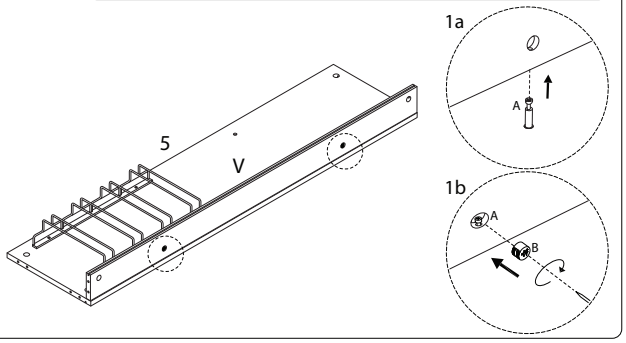

5

C
x 6

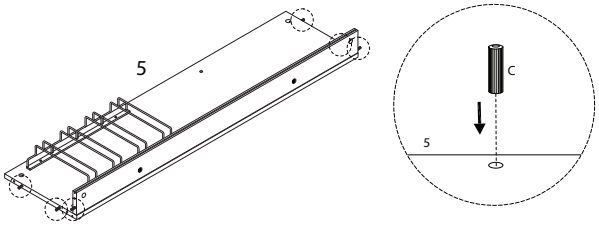

6

B
x 6

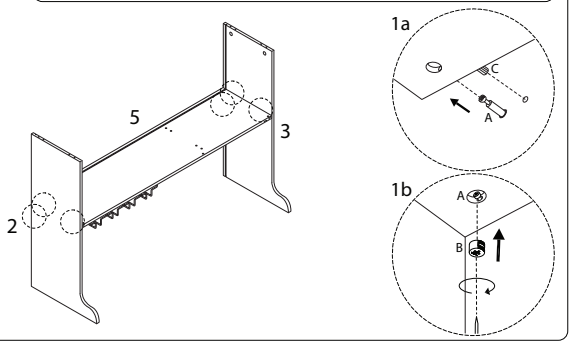

7

C
x 2

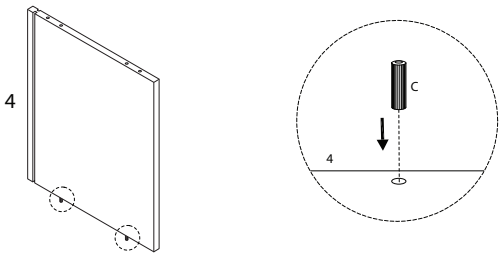

8

D
M4 x 35
x 2

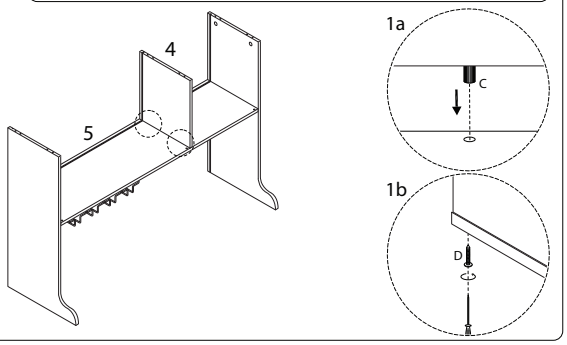

9

26
x 1

27
x 1

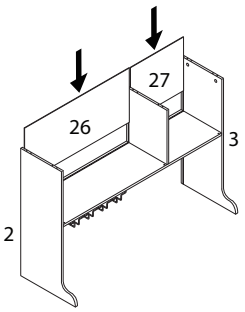

10

C
x 6

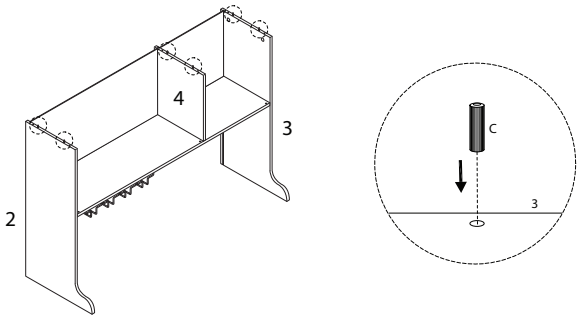

11

1
x 1

7
x 1

A
x 13

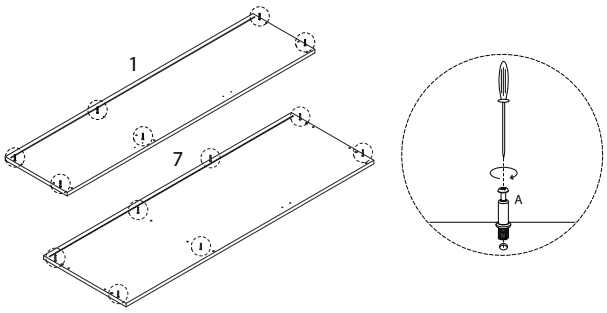

12

J
M3 x 16
x 6

O
x 3

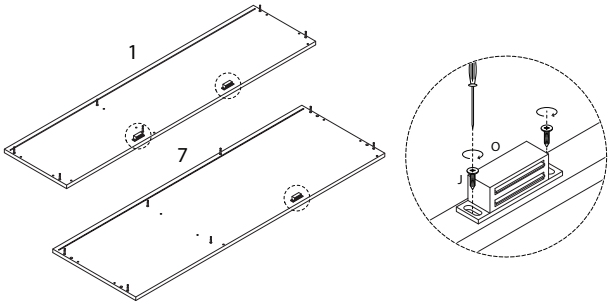

13

B

x 6

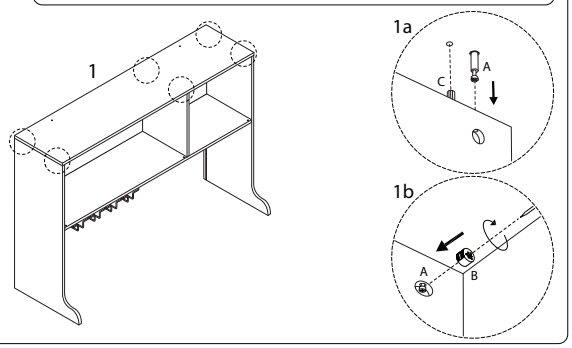

14

28

x 1

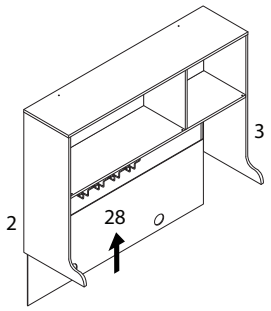

15

T

x 4

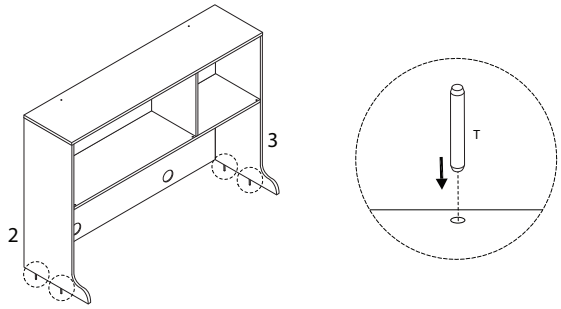

16

D

M4 x 35

x 4

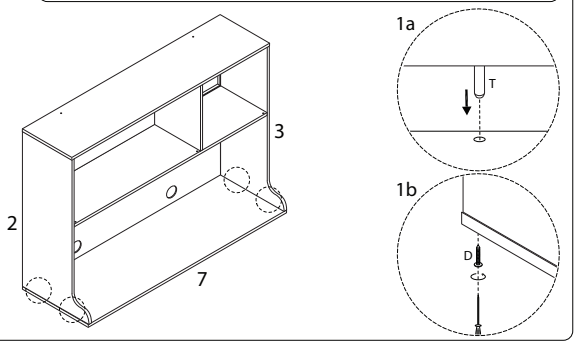

17

10	E	F_{CR}
x 1	M3.5 x 12 x 6	x 2

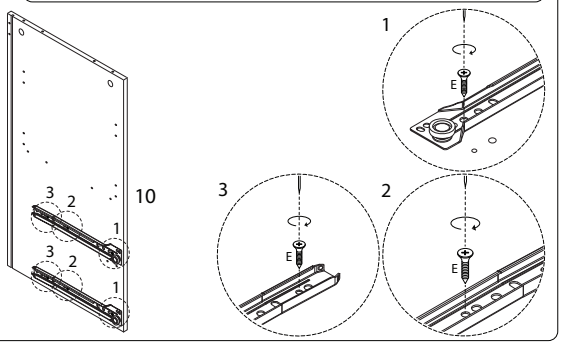

18

A

x 3

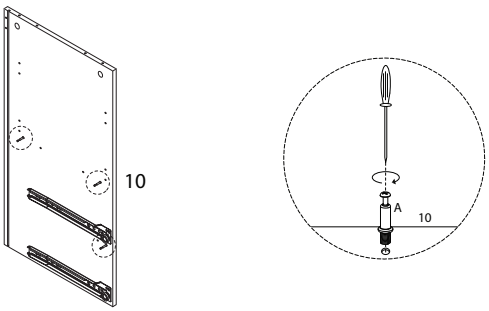

19

9	E	F_{CL}
x 1	M3.5 x 12 x 6	x 2

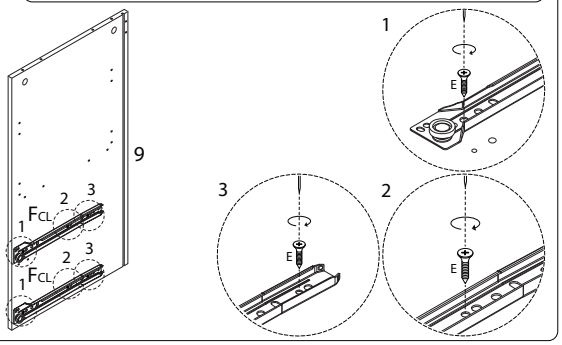

20

A

x 4

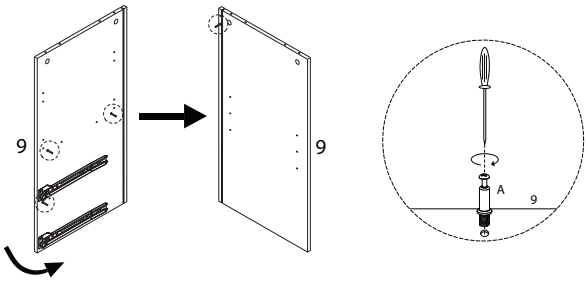

21

8	A
x 1	x 1

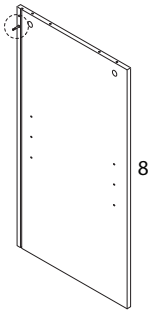

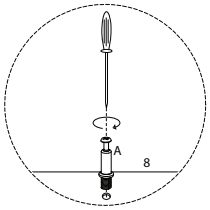

22

12	C
x 2	x 16

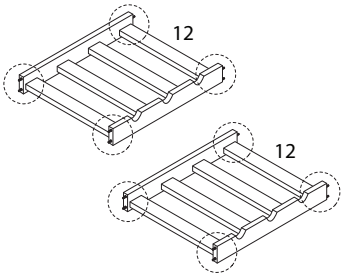

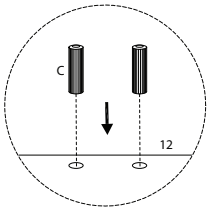

23 x 5

25	D	H
x 1	M4 x 35 x 2	x 1

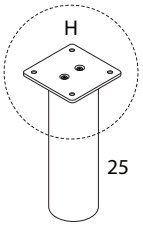

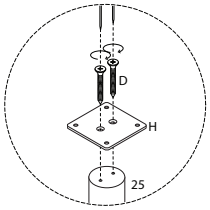

24

15	G
x 1	M4 x 14 x 20

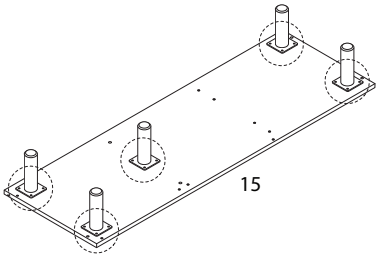

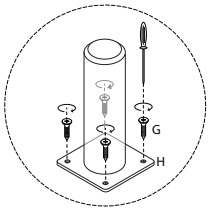

25

13	14	C
x 1	x 1	x 6

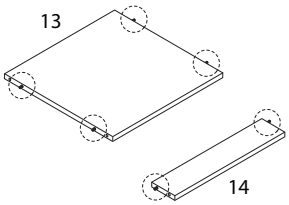

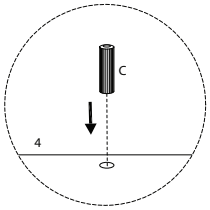

27

B
x 3

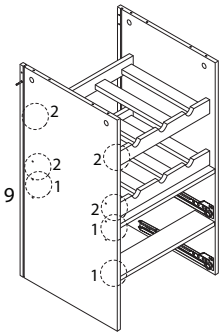

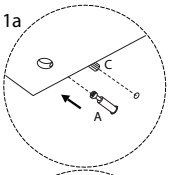

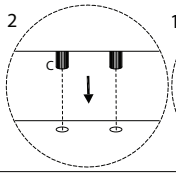

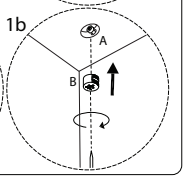

26

B
x 3

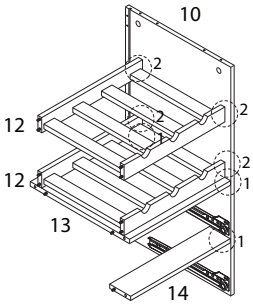

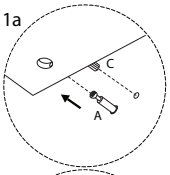

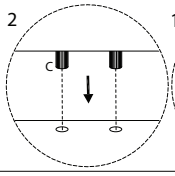

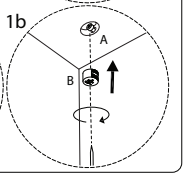

28

29	C
x 1	x 2

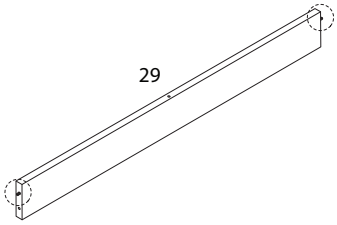

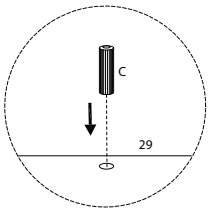

29

B
x 2

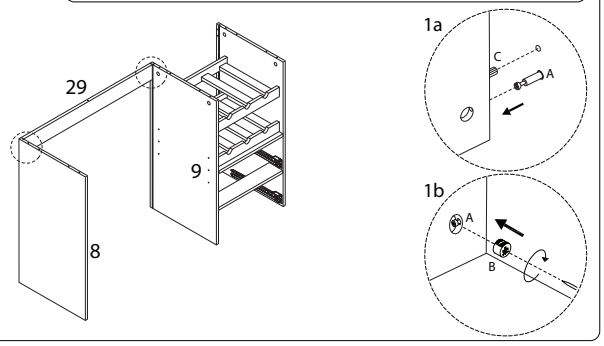

30

C
x 6

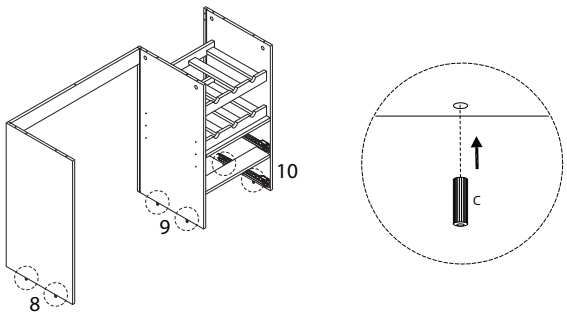

31

D
M4 x 35
x 6

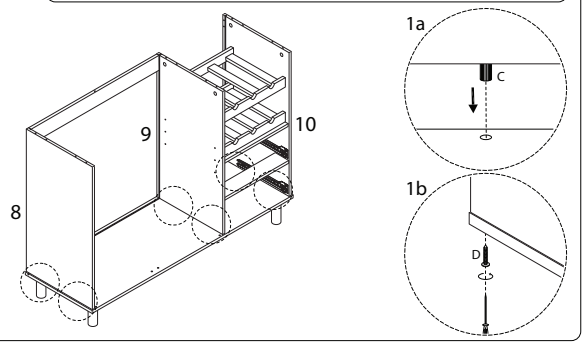

32

30	31	32
x 2	x 1	x 1

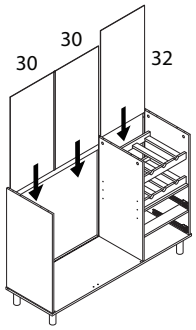

33

J	O
M3 x 16	
x 2	x 1

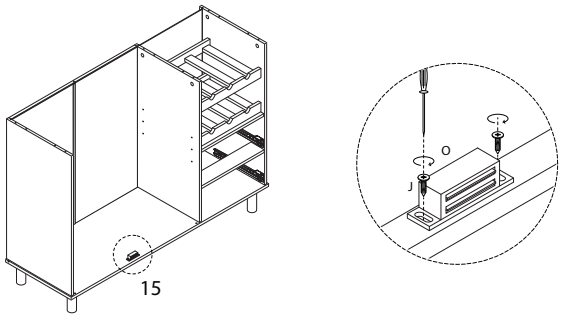

34

B
x 7

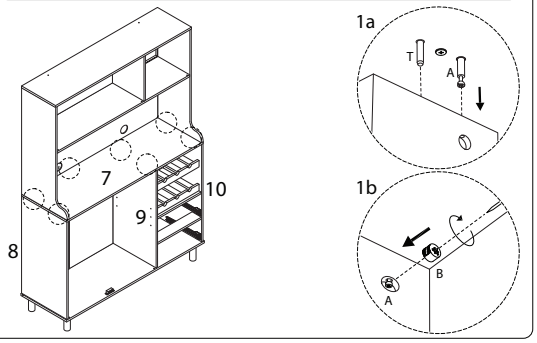

35

I	J
M3 x 16	
x 22	x 22

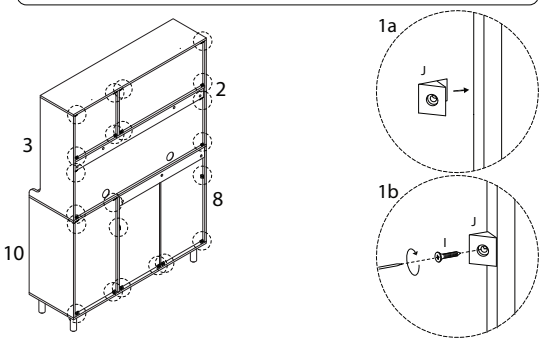

36

23	24	M	U
		M4 x 18	
x 1	x 1	x 4	x 2

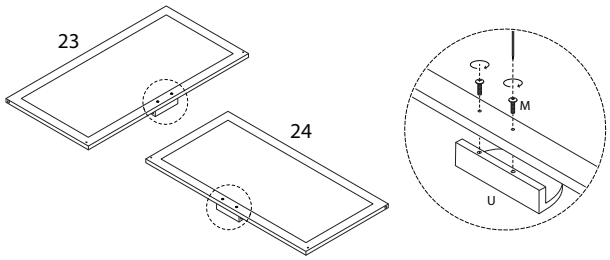

37

16	17	L	M
x 1	x 2	x 3	M4 x 18 x 3

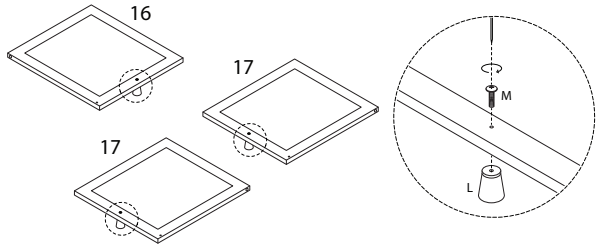

38

Q	S
x 7	M4 x 12 x 7

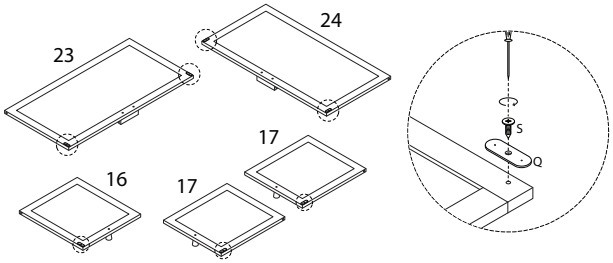

39

P
x 10

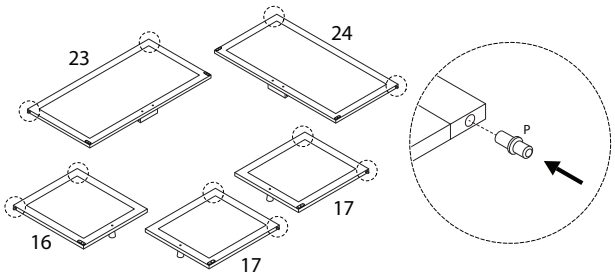

40

R
x 4

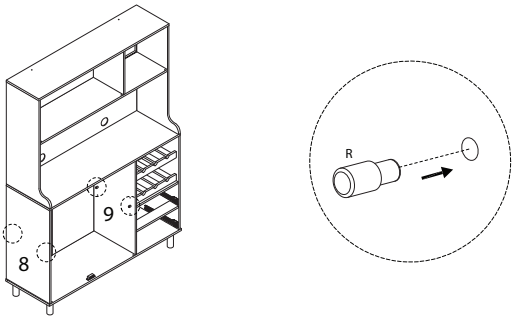

41

11
x 1

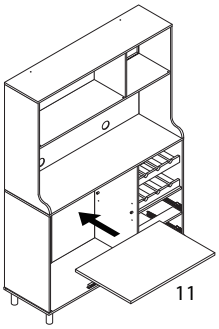

43 x 2

21
x 1

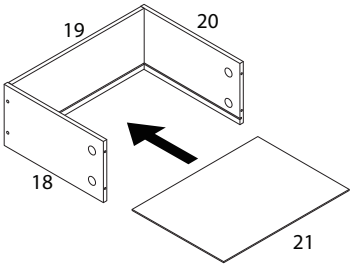

42 x 2

18	19	20	D
x 1	x 1	x 1	M4 x 35 x 4

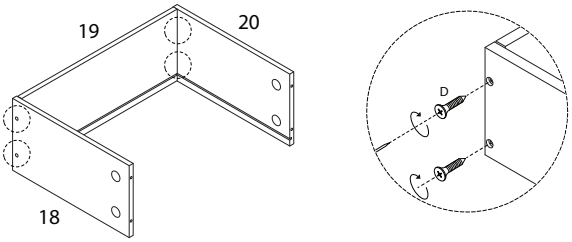

44 x 2

22	A
x 1	x 4

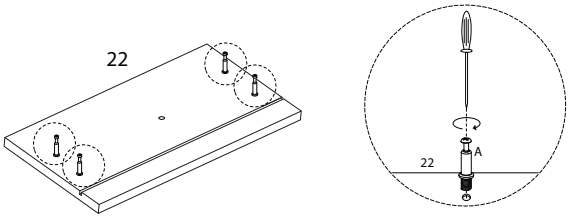

45 x 2

B

x 4

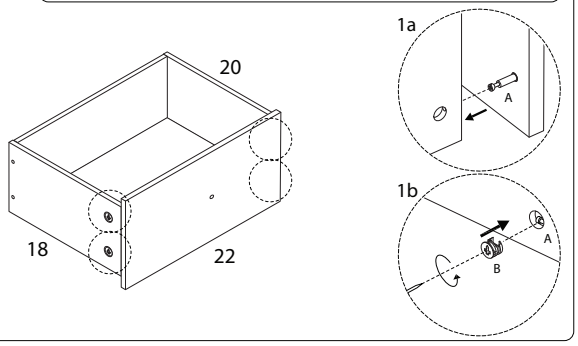

47 x 2

E	FDL	FDR
M3.5 x 12		
x 6	x 1	x 1

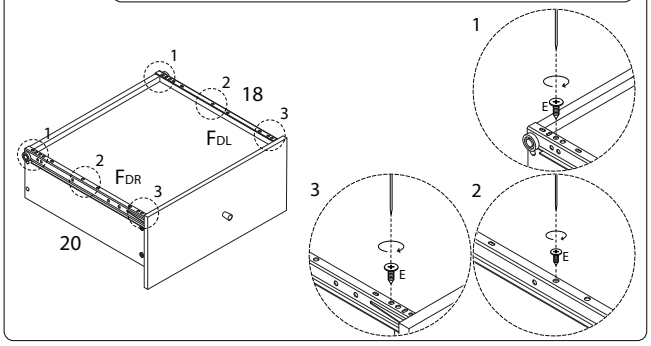

46 x 2

L	M
	M4 x 18
x 1	x 1

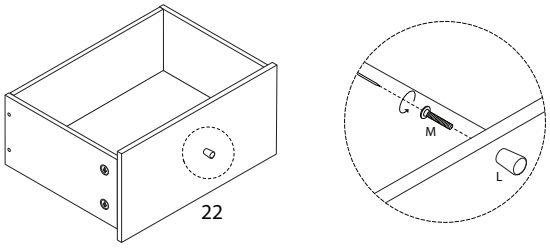

48

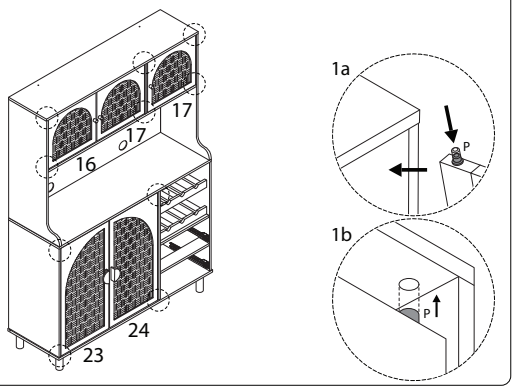

!

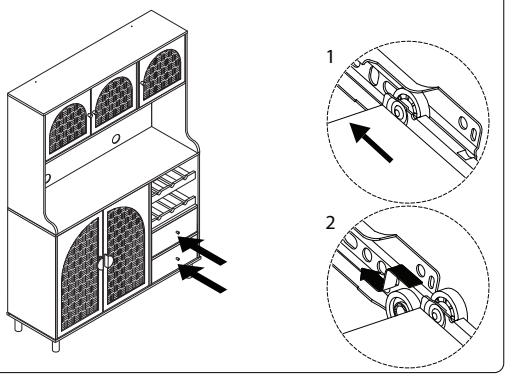

50

N

x 2

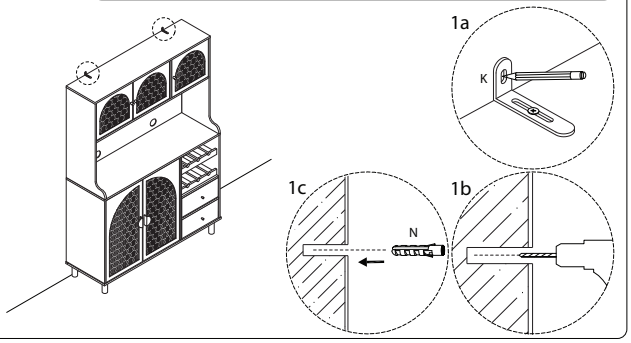

49

G	K
M4 x 14	
x 2	x 2

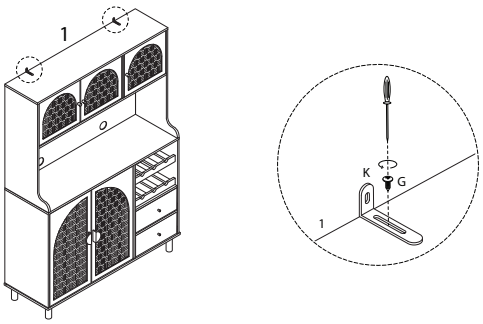

51

D

M4 x 35
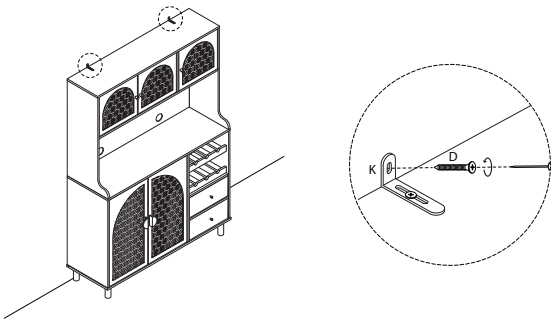
x 2