LORIENT

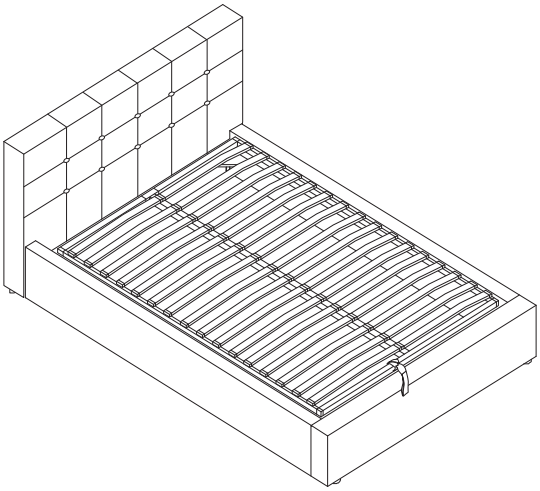

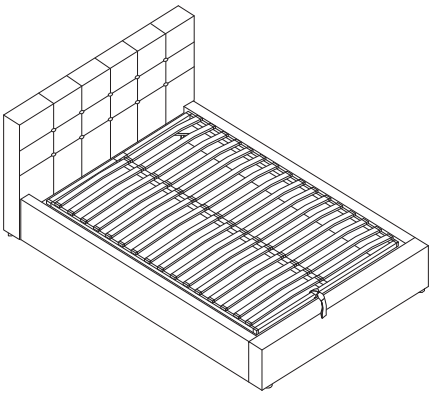

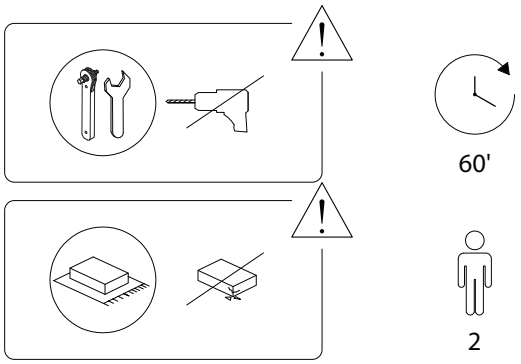

1/14

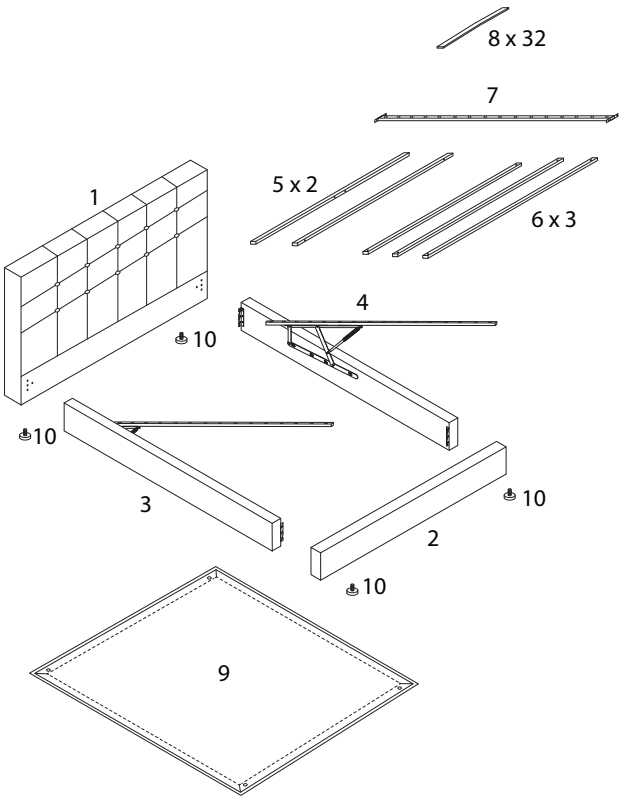

2	3	4
x 1	x 1	x 1
5	6	7
x 2	x 3	x 1
8	9	10
x 32	x 1	x 4

1
x 1

2/14

3/14

A	B	C	D
M8 x 25	M6 x 15	M6 x 30	M6 x 65
x 12	x 12	x 6	x 2
E	**F**	**G**	**H**
x 12	x 12	x 2	x 1
J	**K**	**L**	**M**
x 1	x 1	x 4	x 4
N	**P**	**Q**	**S**
x 1	x 32	x 16	x 3

!

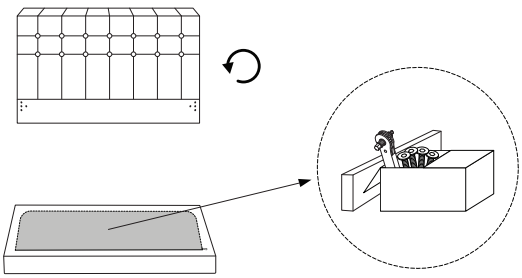

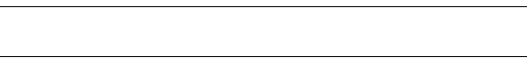

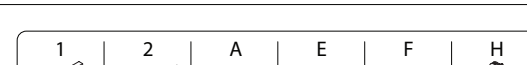

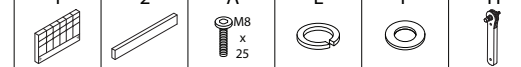

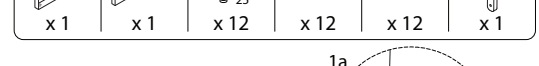







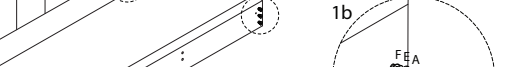





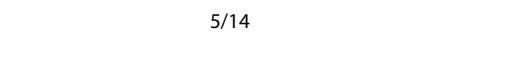

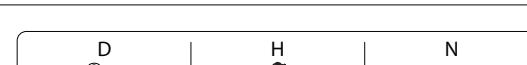



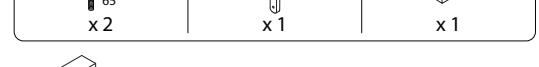









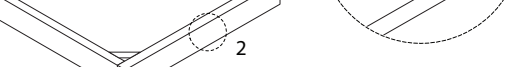

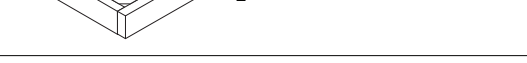













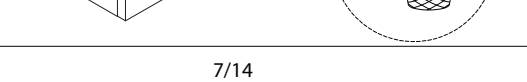

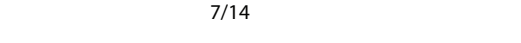

2



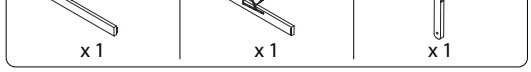

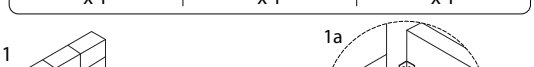







4

5

G	K
x 2	x 1

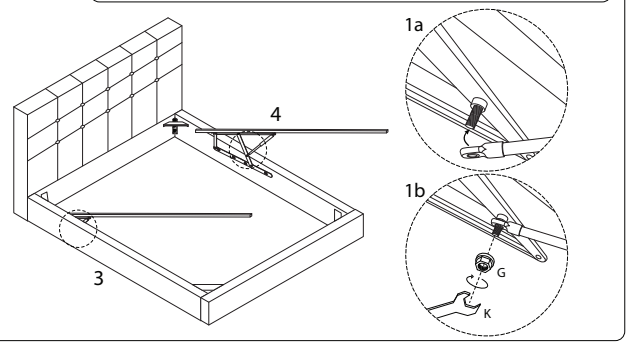

6 x 2

5	L
x 1	x 2

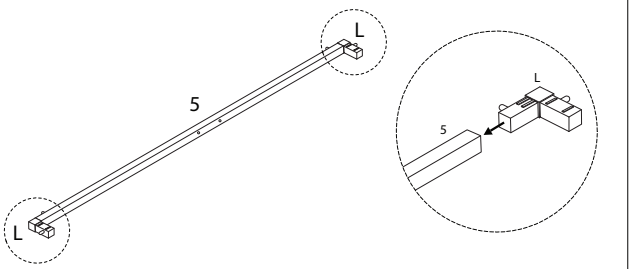

7

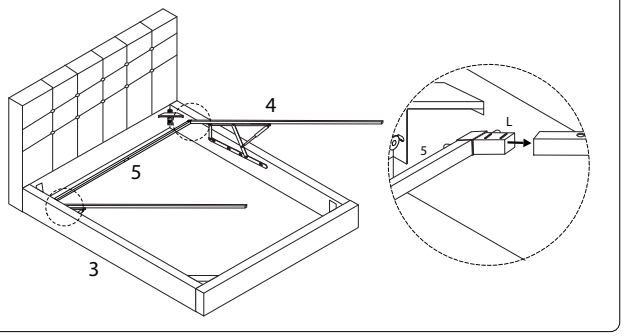

8

6	C	H
x 3	M6 x 30 x 6	x 1

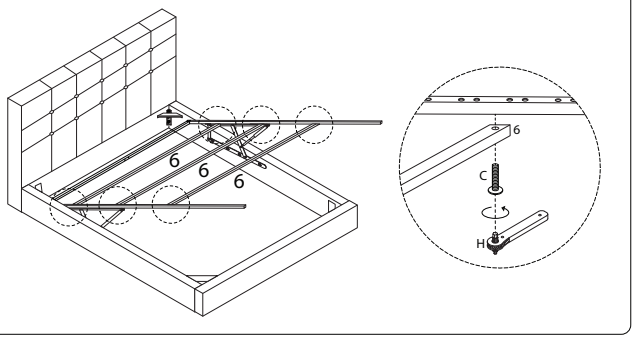

9

S
x 3

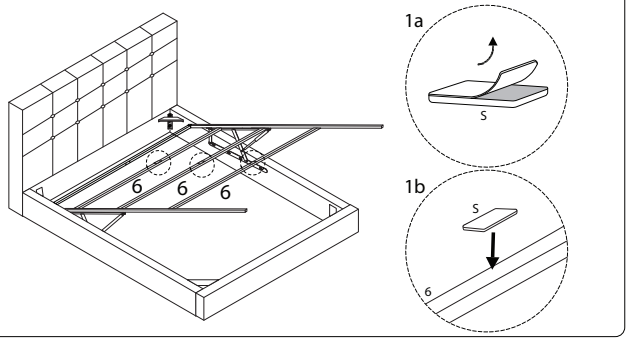

10

7	8	H
x 1	M6 x 15 x 2	x 1

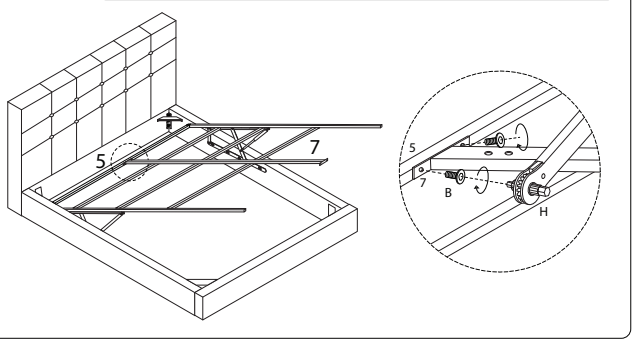

11

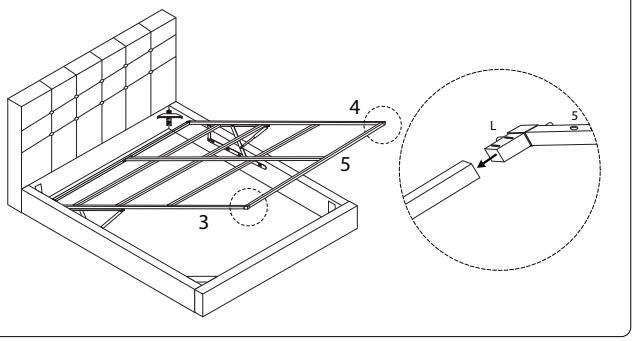

12

B	H
M6 x 15 x 2	x 1

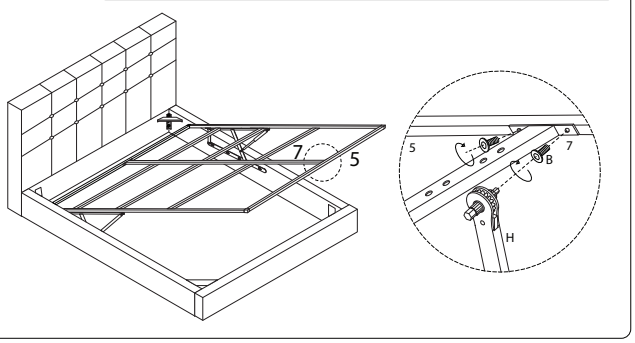

13

9

x 1

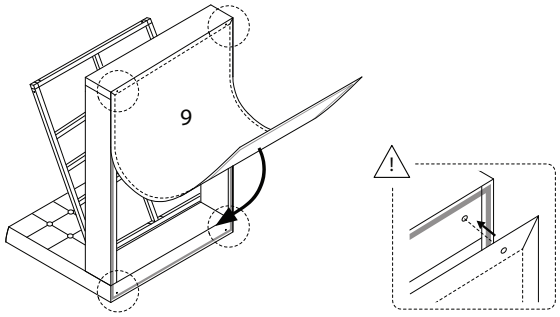

14

10

x 4

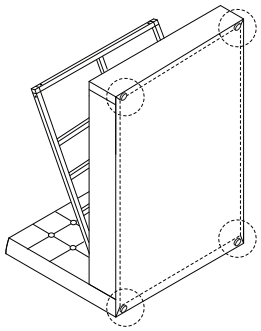

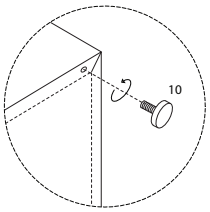

15

J

x 1

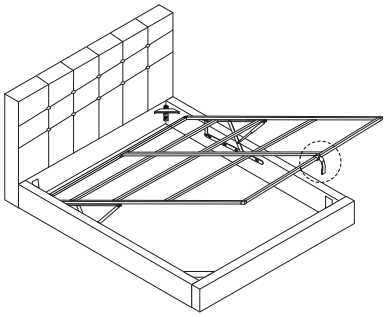

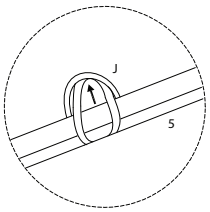

16 x 16

8

x 2

P

x 2

Q

x 1

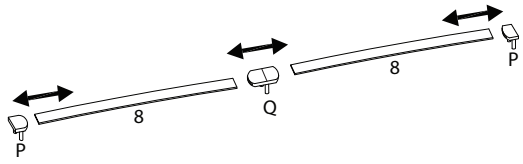

17

