ASSEMBLY INSTRUCTIONS

<<Before assembling,check all the hardwares and panels>>

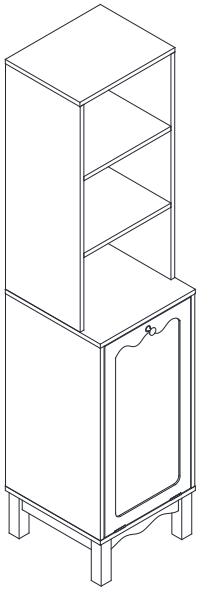

Hardware:

Letter	Piece	Number	Letter	Piece	Number
A	6x30mm	38pcs	J		2pcs
B	6x35mm	34pcs	K		2pcs
C	15x9.5mm	34pcs	L		2pcs
D		1pc	M		1pc
E	3x12mm	14pcs	N	4x12mm	2pcs
F	4x35mm	8pcs	O	4x30mm	4pcs
G	4x16mm	1pc	P		2sets
H	3x14mm	8sets			
I		1pc			

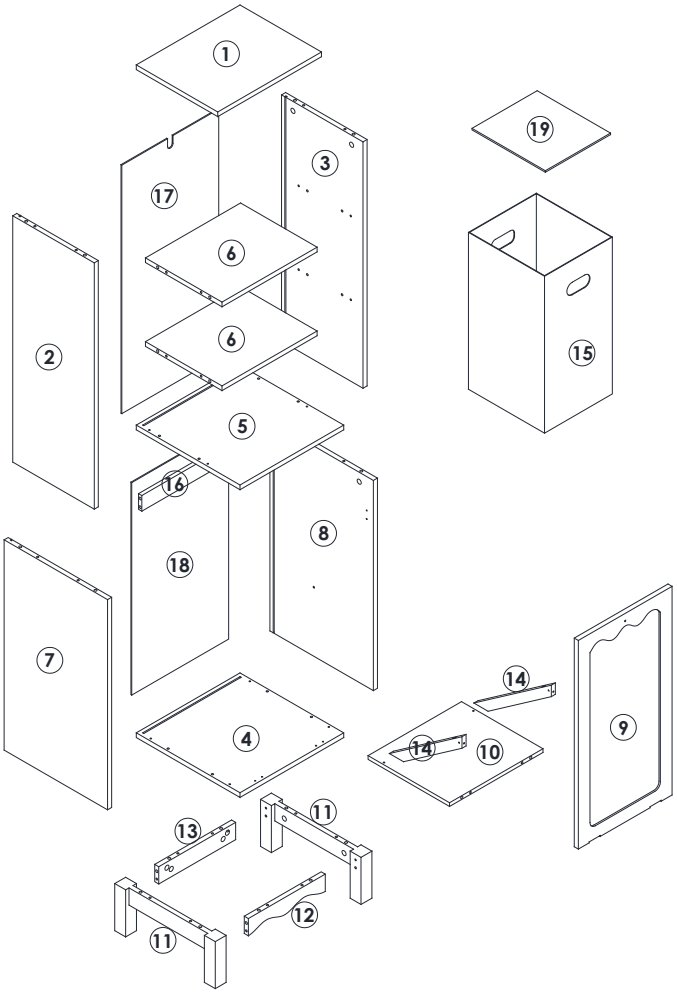

①

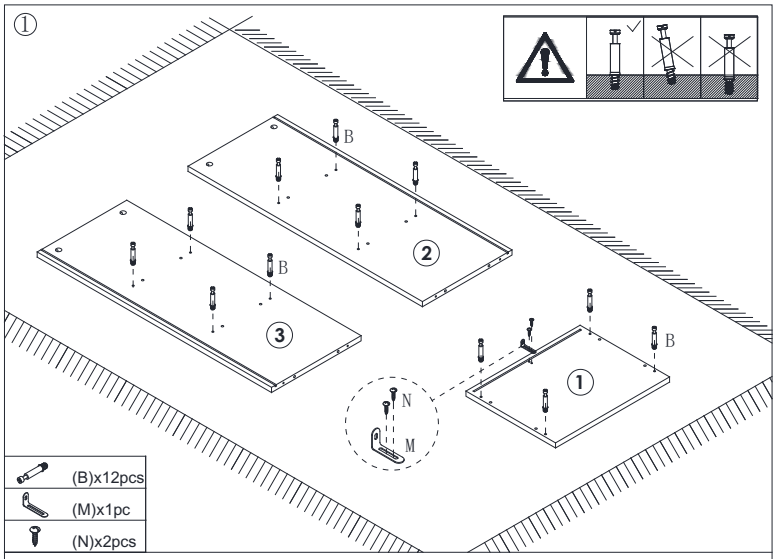

(B)x12pcs
(M)x1pc
(N)x2pcs

②

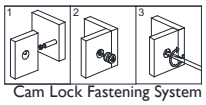

Cam Lock Fastening System

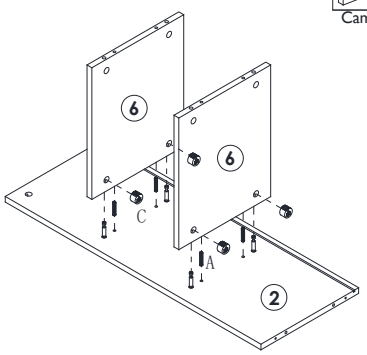

(A)x4pcs
(C)x4pcs

③

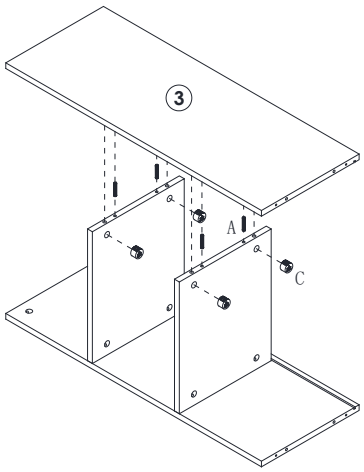

(A)x4pcs
(C)x4pcs

④

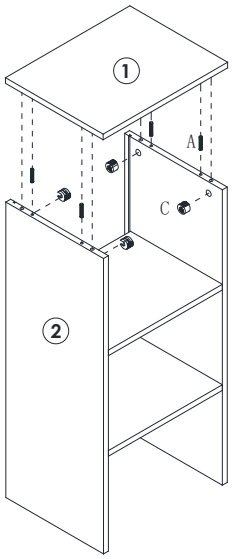

(A)x4pcs
(C)x4pcs

⑤

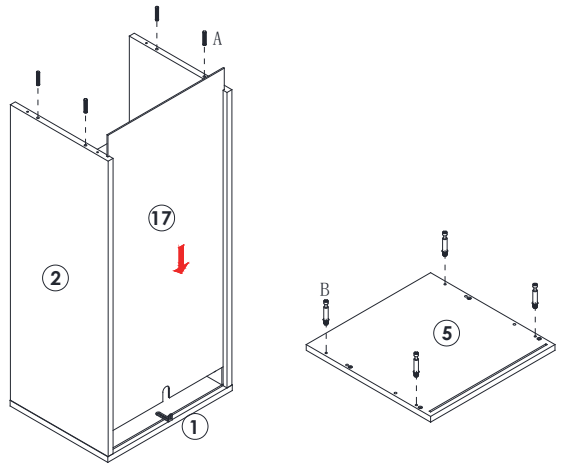

(A)x4pcs

(B)x4pcs

⑥

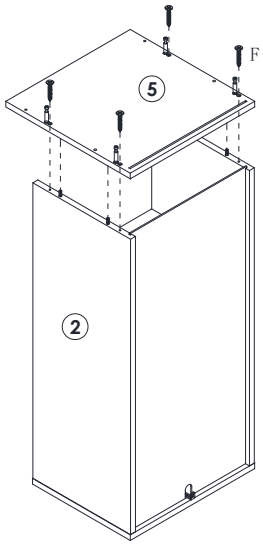

(F)x4pcs

⑦

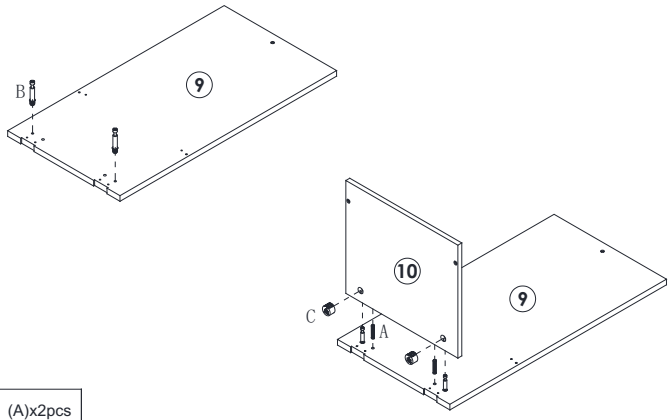

(A)x2pcs

(B)x2pcs

(C)x2pcs

⑧

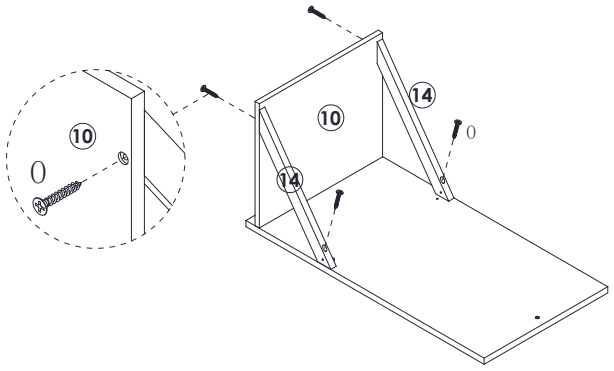

(O)x4pcs

⑨

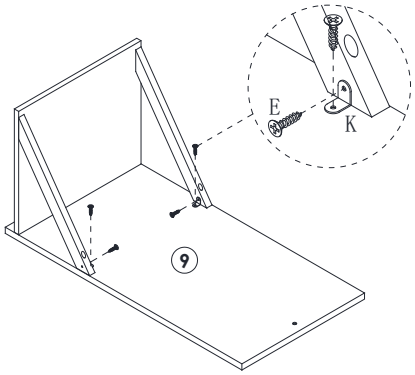

(E)x4pcs

(K)x2pcs

⑩

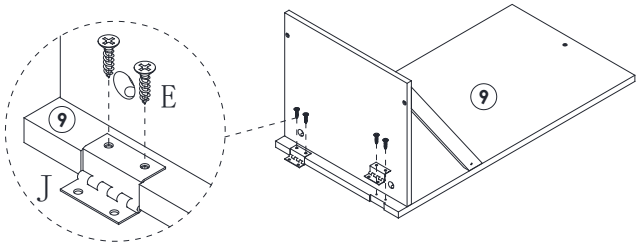

(E)x4pcs

(J)x2pcs

⑪

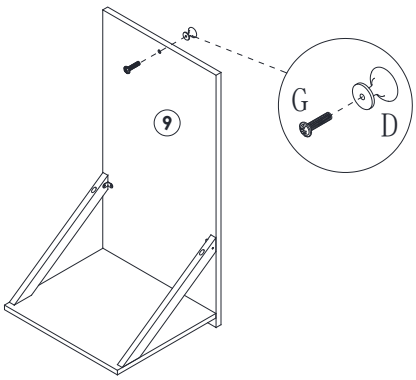

(D)x1pc

(G)x1pc

⑫

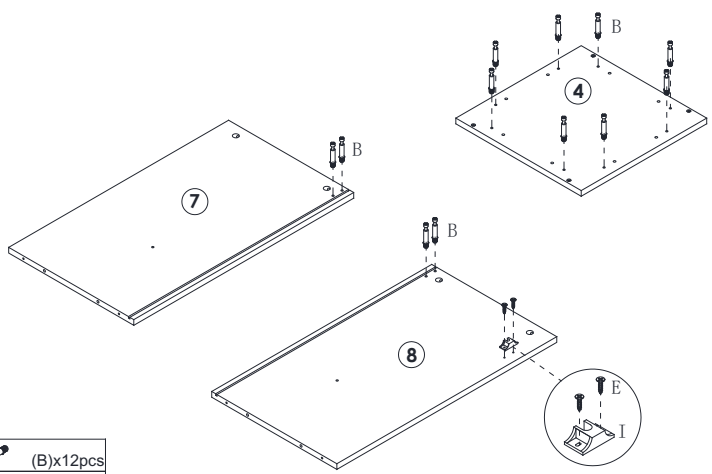

(B)x12pcs

(E)x2pcs

(I)x1pc

13

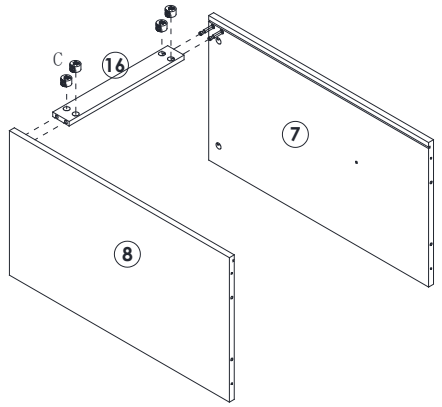

(C)x4pcs

14

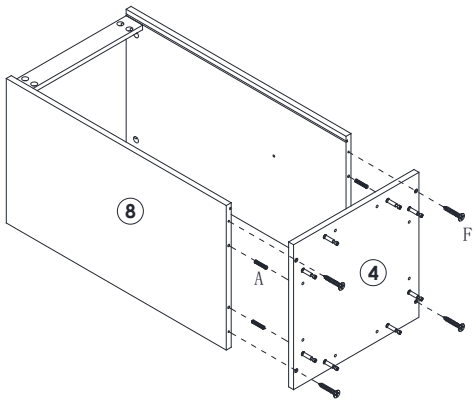

(A)x4pcs

(F)x4pcs

9

15

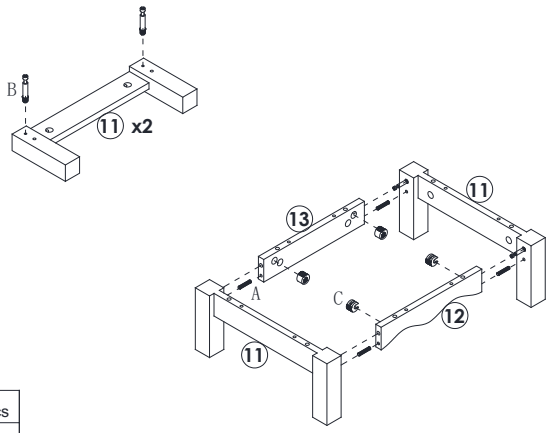

(A)x4pcs

(B)x4pcs

(C)x4pcs

16

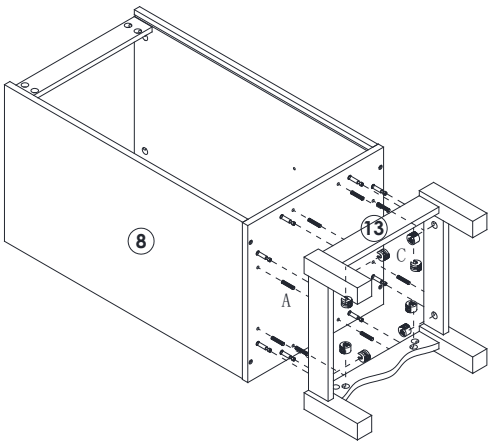

(A)x8pcs

(C)x8pcs

10

17

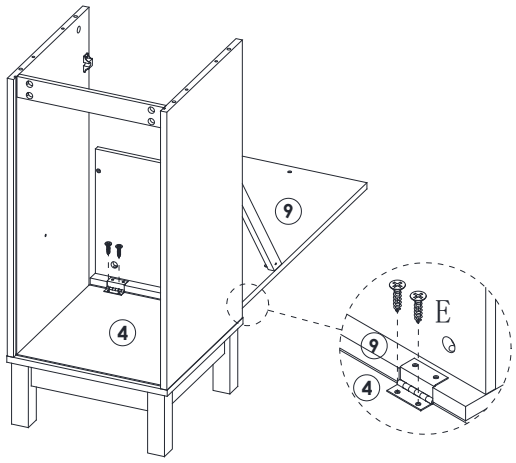

(E)x4pcs

18

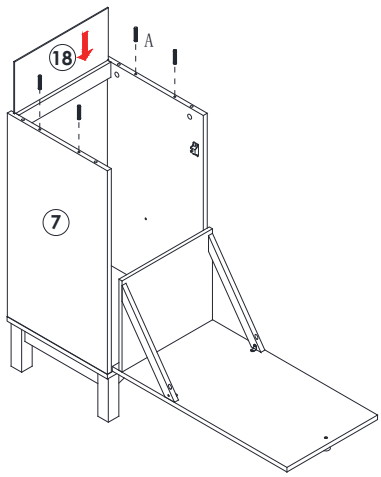

(A)x4pcs

11

19

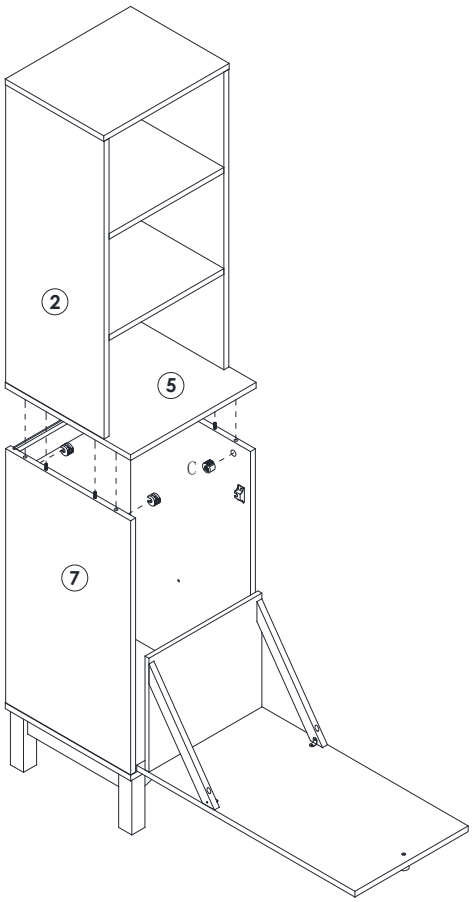

(C)x4pcs

12

20

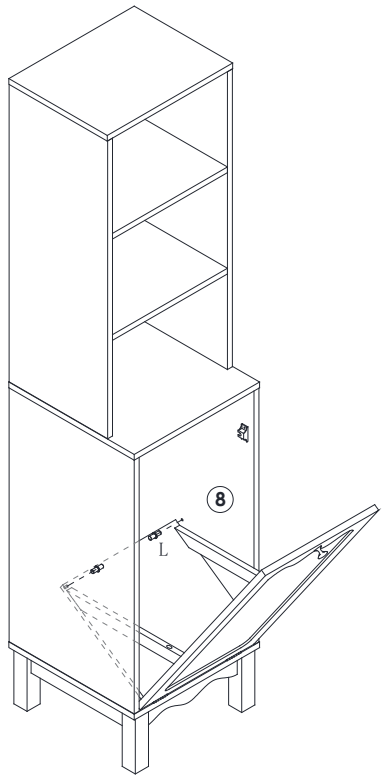

(L)x2pcs

13

21

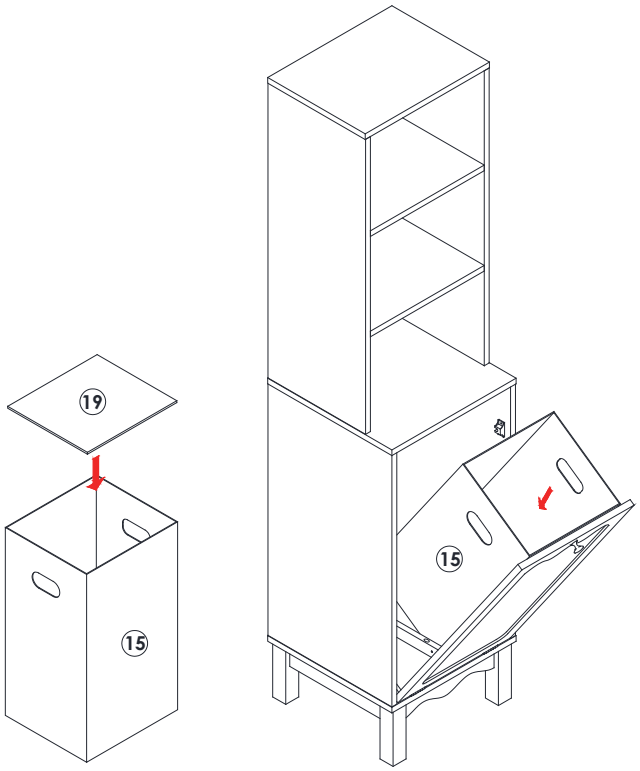

14

22

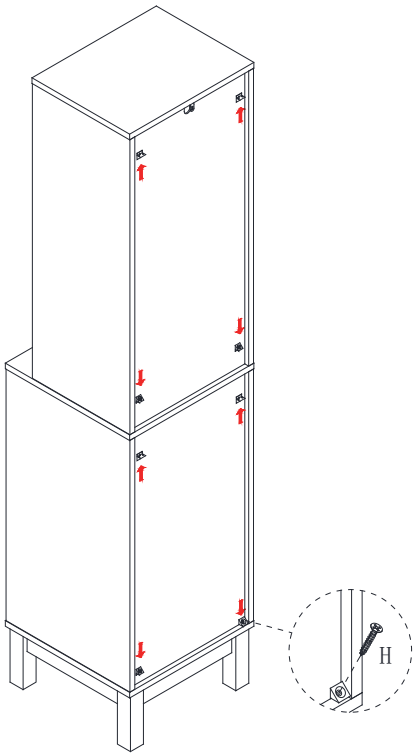

(H)x8sets

15

23

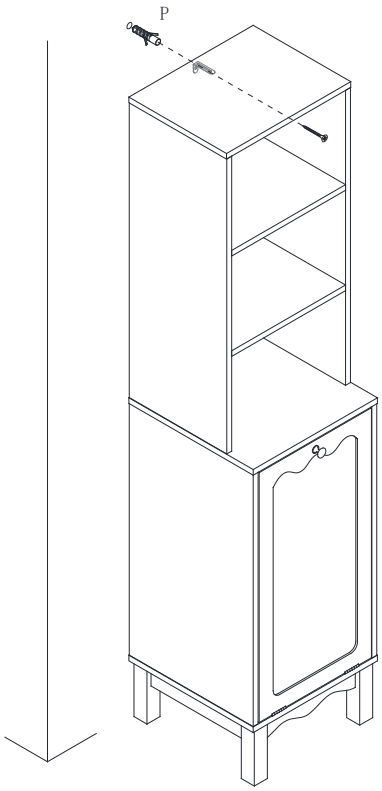

(P)x2sets

16